Product datasheet

Specifications

Green Premium™

Harmony XVU, Fixing plate with 100mm aluminium pole for modular tower lights, black, 60mm

XVUZ02

Main

Range Of Product	Harmony XVU
Product Or Component Type	Modular tower light
Accessory / Separate Part Type	Fixing plate
Accessory / Separate Part Category	Mounting and fixing accessory
Component Name	XVU
Mounting Diameter	60 mm

Complementary

Pole Heigth	100 mm
Mounting Support	Plate with pole
Product Compatibility	Top: AC body Top: DC body Top: swivel mounting support
Material	PBT (polybutylene terephthalate) V-0 conforming to UL 94 ABS (acrylonitrile butadiene-styrene) PC (polycarbonate) Aluminium
Housing Colour	Black
Connections - Terminals	Push-in
[Us] Rated Supply Voltage	24 V AC/DC 110...240 V AC
Length	117 mm
Net Weight	0.132 kg

Environment

Ambient Air Temperature For Storage	-40…70 °C
Ambient Air Temperature For Operation	-25…50 °C
Ip Degree Of Protection	IP65
Product Certifications	CSA UL CE

Packing Units

Unit Type Of Package 1	PCE
Number Of Units In Package 1	1

Disclaimer: This documentation is not intended as a substitute for and is not to be used for determining suitability or reliability of these products for specific user applications

Package 1 Height	9.1 cm
Package 1 Width	26.8 cm
Package 1 Length	9.0 cm
Package 1 Weight	285.0 g
Unit Type Of Package 2	S03
Number Of Units In Package 2	12
Package 2 Height	30.0 cm
Package 2 Width	30.0 cm
Package 2 Length	40.0 cm
Package 2 Weight	4.481 kg
Unit Type Of Package 3	PAL
Number Of Units In Package 3	96
Package 3 Height	60.0 cm
Package 3 Width	80.0 cm
Package 3 Length	70.0 cm
Package 3 Weight	35.36 kg

Sustainability

Green Premium™ label is Schneider Electric's commitment to delivering products with best-in-class environmental performance. Green Premium promises compliance with the latest regulations, transparency on environmental impacts, as well as circular and low-CO_2 products.

Guide to assessing product sustainability is a white paper that clarifies global eco-label standards and how to interpret environmental declarations.

Learn more about Green Premium >

Guide to assess a product's sustainability >

Transparency RoHS/REACh

Well-being performance

Mercury Free

Rohs Exemption Information	Yes

Certifications & Standards

Reach Regulation	REACh Declaration
Eu Rohs Directive	Pro-active compliance (Product out of EU RoHS legal scope)
China Rohs Regulation	China RoHS declaration
Environmental Disclosure	Product Environmental Profile
Circularity Profile	End of Life Information

Dimensions Drawings

Fixing Unit - Plate with Pole

Dimensions

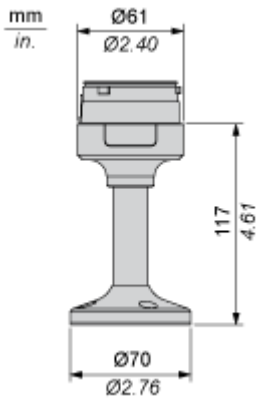

Mounting and Clearance

Modular Tower Lights Mounting

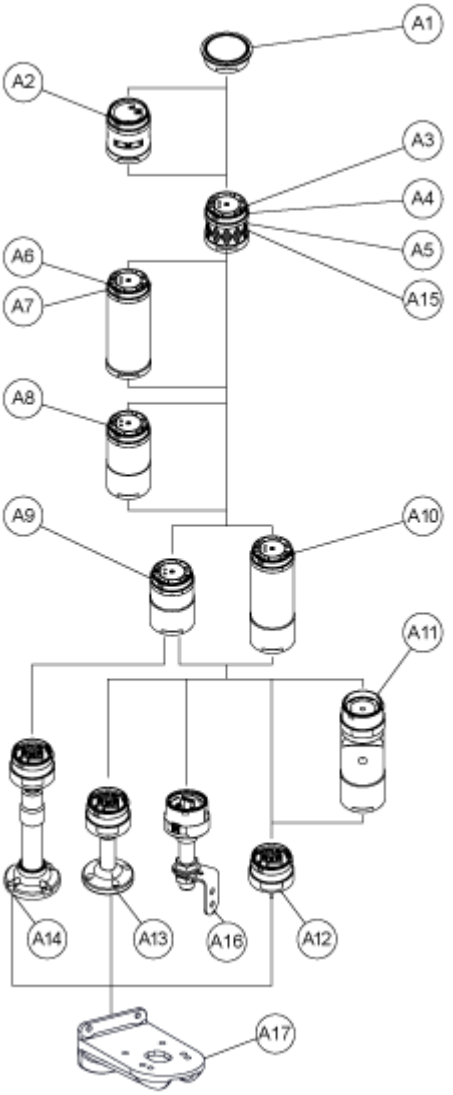

Drawing	Part number	Part name
A1	-	Top cover
	-	Top cover (Silver)
A2	XVUC9S	Buzzer unit
	XVUC9SQ	Buzzer unit (Silver)
A3	XVUC23	Green LED unit
	XVUC24	Red LED unit
	XVUC25	Orange LED unit
	XVUC26	Blue LED unit

Drawing	Part number	Part name
	XVUC27	White LED unit
	XVUC28	Yellow LED unit
A4	XVUC29	Multi-LED unit
A5	XVUC29P	Multi-LED unit, Pulse signal
A6	XVUC9V	Sound unit
A7	XVUC9VP	Sound unit, Pulse signal
A8	XVUC020	Extender
	XVUC020Q	Extender (Silver)
A9	XVUC21B	DC body
	XVUC21BQ	DC body (Silver)
A10	XVUC21M	AC body NPN
	XVUC21MP	AC body PNP
	XVUC21MQP	AC body PNP (Silver)
A11	XVUZ06	Flexible option
A12	XVUZ01	Fixing Unit - Direct mounting (3 pins)
	XVUZ01Q	Fixing Unit - Direct mounting (Silver,3 pins)
	XVUZ03	Fixing Unit - Direct mounting (2 pins)
	XVUZ04	Fixing Unit - Direct mounting (4 pins)
A13	XVUZ02	Fixing Unit - Plate with Pole (100 mm)
	XVUZ02Q	Fixing Unit - Plate with Pole (100 mm, Silver)
	XVUZ400	Fixing Unit - Plate with Pole (400 mm)
	XVUZ800	Fixing Unit - Plate with Pole (800 mm)
A14	XVUZ05	Fixing Unit - Plate with adjustment pole (100-385 mm)
A15	XVUC43	Green LED unit, Flash
	XVUC44	Red LED unit, Flash
	XVUC45	Orange LED unit, Flash
	XVUC46	Blue LED unit, Flash

Drawing	Part number	Part name
	XVUC47	White LED unit, Flash
	XVUC48	Yellow LED unit, Flash
A16	XVUZ100T	Fixing Unit - Metal bracket with pole (100 mm)
	XVUZ250T	Fixing Unit - Metal bracket with pole(250 mm)
	XVUZ400T	Fixing Unit - Metal bracket with pole (400 mm)
A17	XVUZ12	Fixing plate for use on vertical support - black

Modular Tower Lights Mounting

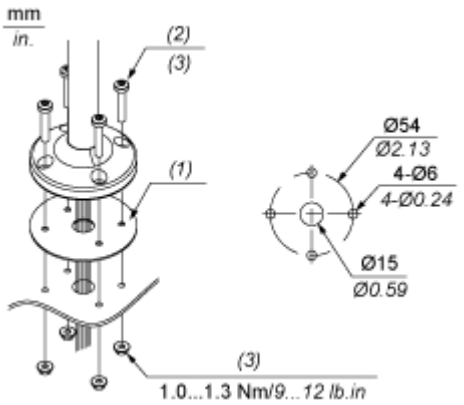

(1) Gasket

(2) Screw x 4 (unattached)

(3) M5 x (thickness+10 mm /0.39 in.)

Connections and Schema

Illuminated Units, Multi-LED and Audible Units Wiring

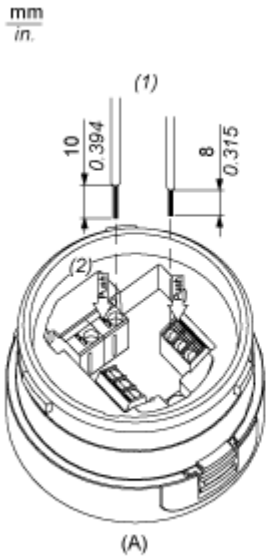

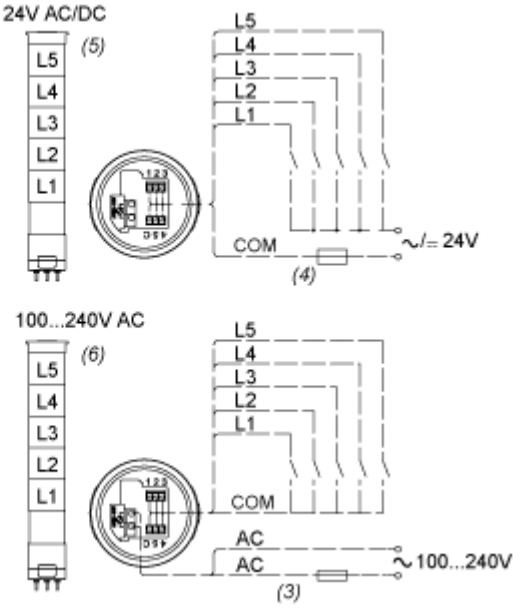

(A) Fixing Unit

(1) Dimensions of Wiring size

(2) Push-in Wire Connectors

(3) Fuse : 2A ,250V

(4) Fuse : 0.5A ,125V

(5) Modular Tower Lights 24V AC/DC

(6) Modular Tower Lights 100...240V AC

L1 to L5 : Illuminated LED Units