Product datasheet

Specifications

Pre assembled USB programmable tower lights, Harmony XVGU, multi color, 60mm, steady flashing LED, buzzer

XVGU3SHAV

Main

Range Of Product	Harmony XVGU
Product Or Component Type	USB configurable monolithic tower light
Beacon Or Indicator Bank Unit Type	3 illuminated units
Sound Signalling	Buzzer
Mounting Diameter	60 mm
Component Name	XVGU
Light Source	LED steady or flashing multi-colour
Indicator Bank Base Type	Base with integrated buzzer
Noise Level	85 dB (2 tone buzzer) at 1 m

Complementary

Material	PC: globe
Device Mounting	Tube mounting with fixing plate
Light Block Color	Clear/clear/clear
[Us] Rated Supply Voltage	5 V DC
Connector Type	USB type A female
Current Consumption	400 mA
Sound Frequency	3800 Hz 2700 Hz
Power Consumption In W	2 W
Flashing Frequency	2 Hz with flashing LED unit 1 Hz with flashing LED unit
Product Compatibility	Vijeo Designer 4.6 indoor use only HMIGTO XBTGT.... XBTGK.... XBTGC1. XBTGC2. XBTGH
Net Weight	0.3 kg

Environment

Standards	IEC 61000-6-2 IEC 61000-6-4

Disclaimer: This documentation is not intended as a substitute for and is not to be used for determining suitability or reliability of these products for specific user applications

Product Certifications	GOST CE UL 508 cUL RCM
Ambient Air Temperature For Storage	-35…70 °C
Ambient Air Temperature For Operation	0…55 °C
Electrical Shock Protection Class	Class I
Ip Degree Of Protection	IP54

Packing Units

Unit Type Of Package 1	PCE
Number Of Units In Package 1	1
Package 1 Height	8.2 cm
Package 1 Width	13.0 cm
Package 1 Length	41.5 cm
Package 1 Weight	450.0 g
Unit Type Of Package 2	P06
Number Of Units In Package 2	35
Package 2 Height	80 cm
Package 2 Width	80 cm
Package 2 Length	60 cm
Package 2 Weight	28.75 kg

Contractual warranty

Warranty	18 months

Sustainability

Green Premium™ label is Schneider Electric's commitment to delivering products with best-in-class environmental performance. Green Premium promises compliance with the latest regulations, transparency on environmental impacts, as well as circular and low-CO_2 products.

Guide to assessing product sustainability is a white paper that clarifies global eco-label standards and how to interpret environmental declarations.

Learn more about Green Premium >

Guide to assess a product's sustainability >

Transparency RoHS/REACh

Well-being performance

Mercury Free

Rohs Exemption Information	Yes

Certifications & Standards

Reach Regulation	REACh Declaration
Eu Rohs Directive	Pro-active compliance (Product out of EU RoHS legal scope)
China Rohs Regulation	China RoHS declaration
Environmental Disclosure	Product Environmental Profile
Weee	The product must be disposed on European Union markets following specific waste collection and never end up in rubbish bins
Circularity Profile	No need of specific recycling operations

Dimensions Drawings

Dimensions

Tube Mounting with Fixing Plate

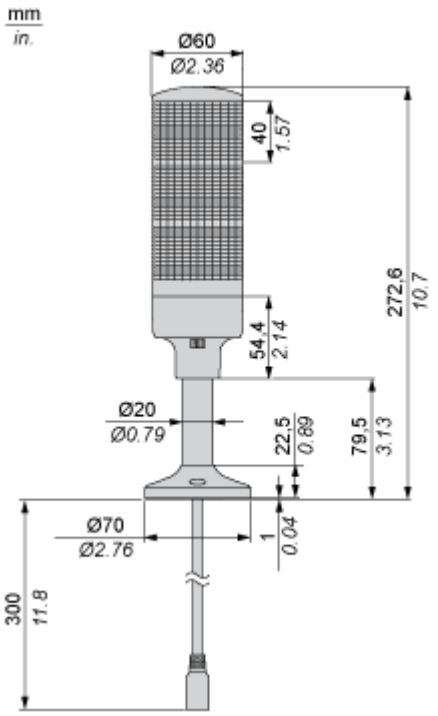

Mounting and Clearance

Mounting on Horizontal Support for Tube Mounting with Fixing Plate

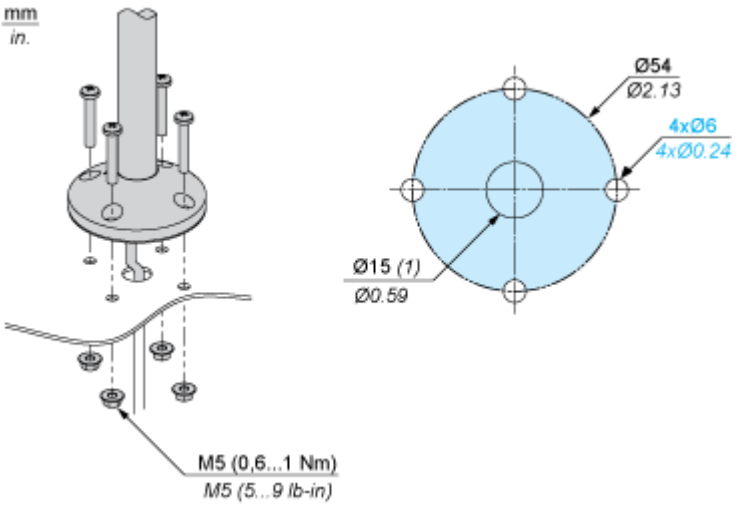

(1) Cable outlet

Mounting Orientation

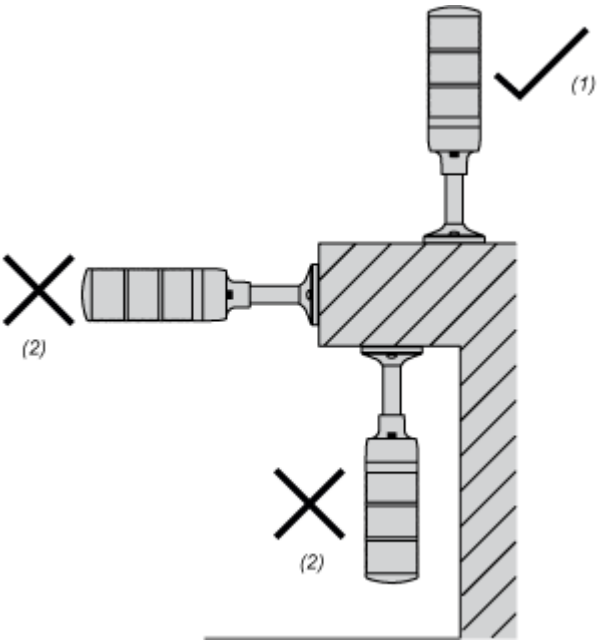

Choose a flat surface with enough strength and with little vibration for installation.Mount this product according to the figure to maintain IP characteristics.

(1) OK

(2) NO