Product datasheet

Specifications

Monolithic emergency stop, Harmony XB7, plastic, red mushroom 40mm, 22mm, latching key release, 2NC

XB7NS9444

Main

Range Of Product	Harmony XB7
Product Or Component Type	Emergency stop push-button
Device Short Name	XB7
Mounting Diameter	22 mm
Sale Per Indivisible Quantity	10
Shape Of Signaling Unit Head	Round
Type Of Operator	mechanical latching
Reset	Key release
Operator Profile	Red mushroom Ø 40 mm, unmarked
Type Of Keylock	Key 455
Contacts Type And Composition	2 NC
Connections - Terminals	Screw clamp terminals, <= 2 x 1.5 mm² with cable end conforming to IEC 60947-1 Screw clamp terminals, 1 x 0.34...2 x 2.5 mm² without cable end conforming to IEC 60947-1
Device Presentation	Monolithic product

Complementary

Cad Overall Width	40 mm
Cad Overall Height	40 mm
Cad Overall Depth	72 mm
Terminals Description Iso N°1	(13-14)NC (21-22)NC
Net Weight	0.035 kg
Device Mounting	Fixing hole - diameter: 22.5 mm 22.3 +0.4/0 conforming to IEC 60947-1
Fixing Center	>= 30 x 40 mm (support panel) metal - thickness: 1…6 mm >= 30 x 40 mm (support panel) plastic - thickness: 2…6 mm
Fixing Mode	Fixing nut beneath head: 2…2.4 N.m
Contact Operation	Snap action
Contacts Usage	Standard
Positive Opening	With conforming to IEC 60947-5-1 appendix K
Mechanical Durability	100000 cycles
Tightening Torque	0.8…1.2 N.m conforming to IEC 60947-1

Disclaimer: This documentation is not intended as a substitute for and is not to be used for determining suitability or reliability of these products for specific user applications

Shape Of Screw Head	Cross compatible with JIS No 1 screwdriver Cross compatible with Philips no 1 screwdriver Cross compatible with pozidriv No 1 screwdriver Slotted compatible with flat Ø 4 mm screwdriver Slotted compatible with flat Ø 5.5 mm screwdriver
Short-Circuit Protection	4 A cartridge fuse type gG conforming to IEC 60947-5-1
[Ui] Rated Insulation Voltage	250 V (pollution degree 3) conforming to IEC 60947-1
[Uimp] Rated Impulse Withstand Voltage	4 kV conforming to IEC 60947-1
[Ie] Rated Operational Current	0.1 A at 250 V, DC-13, R300 conforming to IEC 60947-5-1 0.22 A at 125 V, DC-13, R300 conforming to IEC 60947-5-1 0.75 A at 240 V, AC-15, C300 conforming to IEC 60947-5-1 1.5 A at 120 V, AC-15, C300 conforming to IEC 60947-5-1
Electrical Durability	1000000 cycles, DC-13, 0.3 A at 24 V, operating rate <216000 cyc/mn, load factor: 0.5 conforming to IEC 60947-5-1 appendix C 1000000 cycles, AC-15, 0.03 A at 230 V, operating rate <216000 cyc/mn, load factor: 0.5 conforming to IEC 60947-5-1 appendix C 1000000 cycles, AC-15, 0.09 A at 240 V, operating rate <108000 cyc/mn, load factor: 0.5 conforming to IEC 60947-5-1 appendix C
Electrical Reliability	Λ < 5 x 10exp(-7) at 17 V and 5 mA conforming to IEC 60947-5-4

Environment

Protective Treatment	TH
Ambient Air Temperature For Storage	-40…70 °C
Ambient Air Temperature For Operation	-25…70 °C
Electrical Shock Protection Class	Class II conforming to IEC 60536
Ip Degree Of Protection	IP20 (rear face) conforming to IEC 60529 IP65 (front face) conforming to IEC 60529
Nema Degree Of Protection	NEMA 12 conforming to UL 50 NEMA 3 conforming to UL 50
Standards	IEC 60364-5-53 IEC 60204-1 CSA C22.2 No 14 UL 508 IEC 60947-5-5 IEC 60947-5-1 ISO 13850 IEC 60947-1
Product Certifications	CCC GOST
Vibration Resistance	5 gn (f= 2…500 Hz) conforming to IEC 60068-2-6
Shock Resistance	15 gn (duration = 11 ms) for half sine wave acceleration conforming to IEC 60068-2-27

Packing Units

Unit Type Of Package 1	PCE
Number Of Units In Package 1	1
Package 1 Height	15.0 cm
Package 1 Width	16.0 cm
Package 1 Length	8.0 cm
Package 1 Weight	76.0 g
Unit Type Of Package 2	BAG
Number Of Units In Package 2	10

Package 2 Height	16.0 cm
Package 2 Width	15.0 cm
Package 2 Length	8.0 cm
Package 2 Weight	762.0 g
Unit Type Of Package 3	S01
Number Of Units In Package 3	50
Package 3 Height	15 cm
Package 3 Width	15 cm
Package 3 Length	40 cm
Package 3 Weight	4.046 kg

Contractual warranty

Warranty	18 months

Sustainability

Green Premium™ label is Schneider Electric's commitment to delivering products with best-in-class environmental performance. Green Premium promises compliance with the latest regulations, transparency on environmental impacts, as well as circular and low-CO_2 products.

Guide to assessing product sustainability is a white paper that clarifies global eco-label standards and how to interpret environmental declarations.

Learn more about Green Premium >

Guide to assess a product's sustainability >

Transparency RoHS/REACh

Well-being performance

Reach Free Of Svhc	
Toxic Heavy Metal Free	
Mercury Free	
Rohs Exemption Information	Yes

Certifications & Standards

Reach Regulation	REACh Declaration
Eu Rohs Directive	Pro-active compliance (Product out of EU RoHS legal scope) EU RoHS Declaration
China Rohs Regulation	China RoHS declaration
Environmental Disclosure	Product Environmental Profile
Weee	The product must be disposed on European Union markets following specific waste collection and never end up in rubbish bins
Circularity Profile	End of Life Information

Dimensions Drawings

Non-illuminated Pushbutton

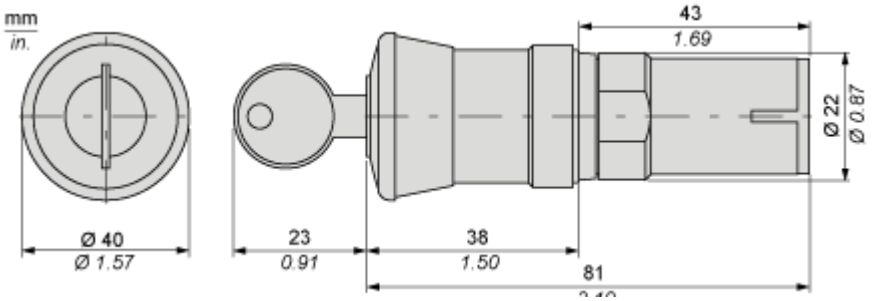

Mounting and Clearance

Mounting

Diameter of Finished Fixing Holes

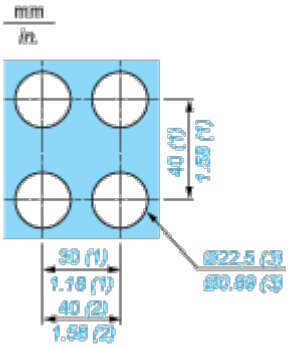

(1) Minimum value.

(2) 40 mm/1.58 in. for Emergency switching off pushbutton only.

(3) Standard value: Ø 22.3 (0; + 0.4) mm/Ø 0.88 (0; + 0.02) in.

“U” Type Tag Connection

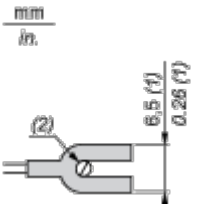

(1) 6.5 mm/0.26 in. recommended, 7 mm/0.28 in. max.

(2) M3 screw clamp terminal.

Connections and Schema
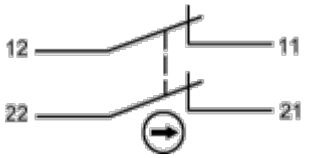
Wiring