Product datasheet

Specifications

Harmony XB4, Pilot light, grey plastic, orange, 22mm, universal LED, plain lens, 24V AC DC

XB4BVB5

Main

Range Of Product	Harmony XB4
Product Or Component Type	Pilot light
Device Short Name	XB4
Bezel Material	Chromium plated metal
Fixing Collar Material	Zamak
Mounting Diameter	22.5 mm
Head Type	Standard
Sale Per Indivisible Quantity	1
Shape Of Signaling Unit Head	Round
Cap/Operator Or Lens Colour	Orange
Operator Additional Information	With plain lens
Light Source	Universal LED
Bulb Base	Integral LED
Light Source Colour	Orange
[Us] Rated Supply Voltage	24 V AC/DC 50/60 Hz

Complementary

Height	47 mm
Width	30 mm
Depth	54 mm
Terminals Description Iso N°1	(X1-X2)PL
Net Weight	0.08 kg
Resistance To High Pressure Washer	7000000 Pa at 55 °C, distance : 0.1 m
Connections - Terminals	Screw clamp terminals, <= 2 x 1.5 mm² with cable end conforming to IEC 60947-1 Screw clamp terminals, 1 x 0.22...2 x 2.5 mm² without cable end conforming to IEC 60947-1
[Ui] Rated Insulation Voltage	250 V (pollution degree 3) conforming to IEC 60947-1
[Uimp] Rated Impulse Withstand Voltage	4 kV conforming to IEC 60947-1
Signalling Type	Steady
Current Consumption	18 mA
Service Life	100000 h at rated voltage and 25 °C
Surge Withstand	1 kV conforming to IEC 61000-4-5

Disclaimer: This documentation is not intended as a substitute for and is not to be used for determining suitability or reliability of these products for specific user applications

Device Presentation	Complete product
Supply Voltage Limits	19.2…30 V DC 21.6…26.4 V AC

Environment

Protective Treatment	TH
Ambient Air Temperature For Storage	-40…70 °C
Ambient Air Temperature For Operation	-40…70 °C
Electrical Shock Protection Class	Class I conforming to IEC 60536
Ip Degree Of Protection	IP66 conforming to IEC 60529 IP67 IP69 IP69K
Nema Degree Of Protection	NEMA 13 NEMA 4X
Ik Degree Of Protection	IK06 conforming to IEC 50102
Standards	IEC 60947-1 IEC 60947-5-4 JIS C8201-5-1 CSA C22.2 No 14 IEC 60947-5-1 UL 508 IEC 60947-5-5 JIS C8201-1
Product Certifications	CSA UL listed
Vibration Resistance	5 gn (f= 12…500 Hz) conforming to IEC 60068-2-6
Shock Resistance	30 gn (duration = 18 ms) for half sine wave acceleration conforming to IEC 60068-2-27 50 gn (duration = 11 ms) for half sine wave acceleration conforming to IEC 60068-2-27
Resistance To Fast Transients	2 kV conforming to IEC 61000-4-4
Resistance To Electromagnetic Fields	10 V/m conforming to IEC 61000-4-3
Resistance To Electrostatic Discharge	6 kV on contact (on metal parts) conforming to IEC 61000-4-2 8 kV in free air (in insulating parts) conforming to IEC 61000-4-2
Electromagnetic Emission	Class B conforming to IEC 55011

Packing Units

Unit Type Of Package 1	PCE
Number Of Units In Package 1	1
Package 1 Height	3.500 cm
Package 1 Width	5.500 cm
Package 1 Length	8.500 cm
Package 1 Weight	79.700 g
Unit Type Of Package 2	S03
Number Of Units In Package 2	150
Package 2 Height	30.000 cm
Package 2 Width	30.000 cm
Package 2 Length	40.000 cm

Package 2 Weight	12.390 kg
Unit Type Of Package 3	P06
Number Of Units In Package 3	1200
Package 3 Height	75.000 cm
Package 3 Width	80.000 cm
Package 3 Length	60.000 cm
Package 3 Weight	107.120 kg

Contractual warranty

Warranty	18 months

Sustainability

Green Premium™ label is Schneider Electric's commitment to delivering products with best-in-class environmental performance. Green Premium promises compliance with the latest regulations, transparency on environmental impacts, as well as circular and low-CO_2 products.

Guide to assessing product sustainability is a white paper that clarifies global eco-label standards and how to interpret environmental declarations.

Learn more about Green Premium >

Guide to assess a product's sustainability >

Transparency RoHS/REACh

Well-being performance

Mercury Free

Rohs Exemption Information	Yes

Certifications & Standards

Reach Regulation	REACh Declaration
Eu Rohs Directive	Pro-active compliance (Product out of EU RoHS legal scope)
China Rohs Regulation	China RoHS declaration
Environmental Disclosure	Product Environmental Profile
Weee	The product must be disposed on European Union markets following specific waste collection and never end up in rubbish bins
Circularity Profile	End of Life Information

Dimensions Drawings

Dimensions

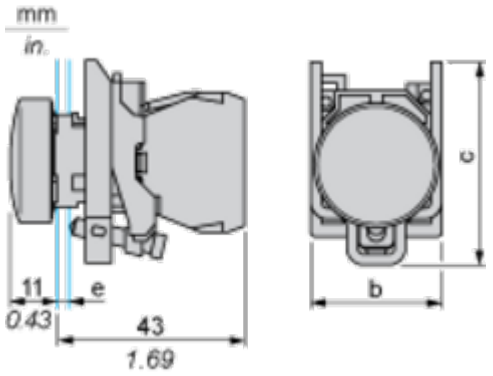

e : clamping thickness: 1 to 6 mm / 0.04 to 0.24 in.
b : 30 mm / 1.18 in.
c : 46.5 mm / 1.83 in.

Mounting and Clearance

Panel Cut-out for Pushbuttons, Switches and Pilot Lights (Finished Holes, Ready for Installation)

Connection by Screw Clamp Terminals or Plug-in Connectors or on Printed Circuit Board	Connection by Faston Connectors
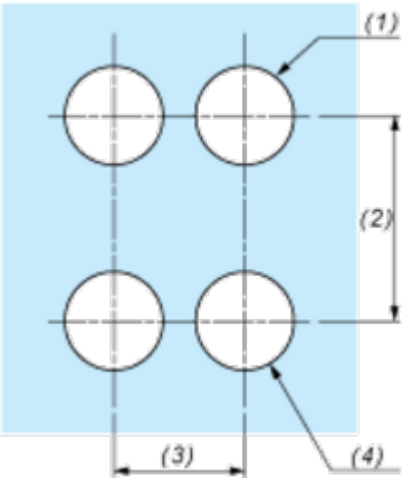	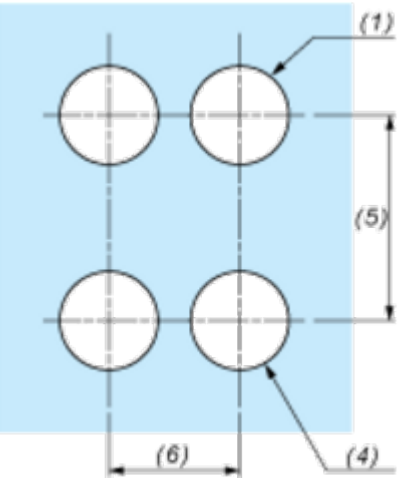

(1) Diameter on finished panel or support
(2) 40 mm min. / 1.57 in. min.
(3) 30 mm min. / 1.18 in. min.
(4) Ø 22.5 mm / 0.89 in. recommended (Ø 22.3 mm $_{0}^{+0.4}$ / 0.88 in. $_{0}^{+0.016}$)
(5) 45 mm min. / 1.78 in. min.
(6) 32 mm min. / 1.26 in. min.