Product datasheet

Specifications

Green Premium™

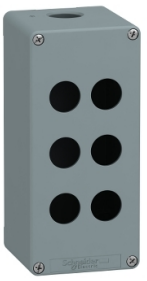

Harmony XAP XB2 SL, Die-cast empty control station - XAPM - Ø 22 - zinc alloy - 6 openings

XAPM3506H29

Discontinued on: 8 Nov 2022

Discontinued

Main

Range Of Product	Harmony XAP
Product Or Component Type	Die-cast empty control station
Device Short Name	XAPM
Product Destination	For Ø 22 mm control and signalling units
Product Front Plate Size	80 x 175 mm
Usable Depth	74.5 mm
Number Of Cut-Out	6 cut-outs
Colour Of Base Of Enclosure	Blue
Colour Of Cover	Blue
Material	Zinc alloy
Cable Entry	1 hole with blanking plug for ISO 429248 cable gland, clamping capacity: 25 mm 1 hole without blanking plug for ISO 429248 cable gland, clamping capacity: 25 mm
Device Mounting	Flush
Ip Degree Of Protection	IP65 conforming to IEC 60529

Complementary

Number Of Vertical Rows	2
Net Weight	1.13 kg

Environment

Protective Treatment	TC
Ambient Air Temperature For Storage	-40…70 °C
Ambient Air Temperature For Operation	-40…70 °C
Overvoltage Category	Class I conforming to IEC 60536 Class I conforming to NF C 20-030

Packing Units

Unit Type Of Package 1	PCE
Number Of Units In Package 1	1
Package 1 Height	9 cm
Package 1 Width	12.2 cm
Package 1 Length	18.8 cm

Disclaimer: This documentation is not intended as a substitute for and is not to be used for determining suitability or reliability of these products for specific user applications

Package 1 Weight	1.296 kg

Contractual warranty

Warranty	18 months

Sustainability

Green Premium™ label is Schneider Electric's commitment to delivering products with best-in-class environmental performance. Green Premium promises compliance with the latest regulations, transparency on environmental impacts, as well as circular and low-CO_2 products.

Guide to assessing product sustainability is a white paper that clarifies global eco-label standards and how to interpret environmental declarations.

Learn more about Green Premium >

Guide to assess a product's sustainability >

Transparency RoHS/REACh

Well-being performance

Reach Free Of Svhc	
Toxic Heavy Metal Free	
Mercury Free	
Rohs Exemption Information	Yes

Certifications & Standards

Reach Regulation	REACh Declaration
Eu Rohs Directive	Pro-active compliance (Product out of EU RoHS legal scope) EU RoHS Declaration
China Rohs Regulation	China RoHS declaration
Environmental Disclosure	Product Environmental Profile
Circularity Profile	No need of specific recycling operations

Dimensions Drawings

Dimensions and Fixing

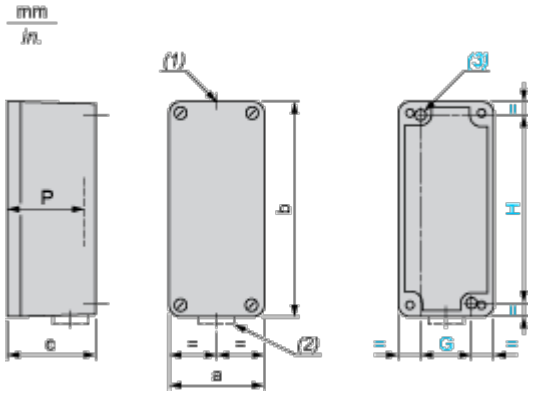

(1) 1 hole, without blanking plug, for cable gland with 18 mm/0.71 in. maximum clamping capacity

(2) 1 hole, with blanking plug (protrusion 6 mm/0.23 in.), for cable gland with 18 mm/0.71 in. maximum clamping capacity

(3) 2 x Ø 5.6 mm/0.22 in. holes, depth 20 mm/0.78 in.

P Usable depth

a		b		c		G		H		P	
mm	in.	mm	in.	mm	in.	mm	in.	mm	in.	mm	in.
80	3.15	175	6.89	77	3.03	50	1.97	160	6.30	74.5	2.93

Refer to the product characteristics to get the number of cut-outs.

Cut-out interaxis dimensions (vertical mounting)

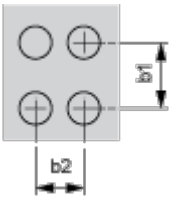

b1 Vertical interaxis: 40 mm/1.57 in.

b2 Horizontal interaxis: 30 mm/1.18 in.