# Product datasheet

Specifications

Green Premium™

## Harmony XAP XB2 SL, Empty control station, zinc alloy, blue, 1 cut-out, Ø22, with ISO cable entries, 80 x 80 x 51.5 mm

XAPM1201H29

Discontinued

Discontinued on: 3 Apr 2023

## Main

| | |
|---|---|
| **Range Of Product** | Harmony XAP |
| **Product Or Component Type** | Die-cast empty control station |
| **Device Short Name** | XAPM |
| **Product Destination** | For Ø 22 mm control and signalling units |
| **Product Front Plate Size** | 80 x 80 mm |
| **Usable Depth** | 49 mm |
| **Number Of Cut-Out** | 1 cut-out |
| **Colour Of Base Of Enclosure** | Blue |
| **Colour Of Cover** | Blue |
| **Material** | Zinc alloy |
| **Cable Entry** | 1 hole with blanking plug for ISO 429248 cable gland, clamping capacity: 20 mm<br>1 hole without blanking plug for ISO 429248 cable gland, clamping capacity: 20 mm |
| **Device Mounting** | Flush |
| **Ip Degree Of Protection** | IP65 conforming to IEC 60529<br>IP69 conforming to NF C 20-010<br>IP69K |

## Complementary

| | |
|---|---|
| **Number Of Vertical Rows** | 1 |
| **Net Weight** | 0.455 kg |

## Environment

| | |
|---|---|
| **Protective Treatment** | TC |
| **Ambient Air Temperature For Storage** | -40…70 °C |
| **Ambient Air Temperature For Operation** | -40…70 °C |
| **Overvoltage Category** | Class I conforming to IEC 60536<br>Class I conforming to NF C 20-030 |

## Packing Units

| | |
|---|---|
| **Unit Type Of Package 1** | PCE |
| **Number Of Units In Package 1** | 1 |
| **Package 1 Height** | 8.2 cm |

Disclaimer: This documentation is not intended as a substitute for and is not to be used for determining suitability or reliability of these products for specific user applications

| | |
|---|---|
| **Package 1 Width** | 9 cm |
| **Package 1 Length** | 9.2 cm |
| **Package 1 Weight** | 524 g |

## Contractual warranty

| | |
|---|---|
| **Warranty** | 18 months |

## Sustainability

**Green Premium™ label** is Schneider Electric's commitment to delivering products with best-in-class environmental performance. Green Premium promises compliance with the latest regulations, transparency on environmental impacts, as well as circular and low-$CO_2$ products.

**Guide to assessing product sustainability** is a white paper that clarifies global eco-label standards and how to interpret environmental declarations.

Learn more about Green Premium >

Guide to assess a product's sustainability >

Transparency RoHS/REACh

## Well-being performance

| | |
|---|---|
| Reach Free Of Svhc | |
| Toxic Heavy Metal Free | |
| Mercury Free | |
| Rohs Exemption Information | Yes |

## Certifications & Standards

| | |
|---|---|
| **Reach Regulation** | REACh Declaration |
| **Eu Rohs Directive** | Pro-active compliance (Product out of EU RoHS legal scope)<br>EU RoHS Declaration |
| **China Rohs Regulation** | China RoHS declaration |
| **Environmental Disclosure** | Product Environmental Profile |
| **Circularity Profile** | No need of specific recycling operations |

## Dimensions Drawings

### Dimensions and Fixing

Refer to the product characteristics to get the number of cut-outs.

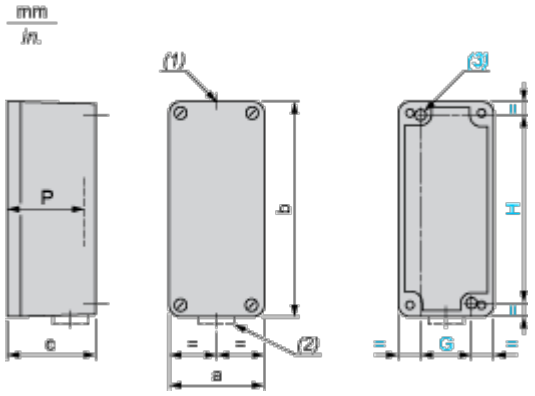


(1) 1 hole, without blanking plug, for cable gland with 14 mm/0.55 in. maximum clamping capacity

(2) 1 hole, with blanking plug (protrusion 6 mm/0.23 in.), for cable gland with 14 mm/0.55 in. maximum clamping capacity

(3) 2 x Ø 5.6 mm/0.22 in. holes, depth 20 mm/0.78 in.

P Usable depth

| a | | b | | c | | G | | H | | P | |
|---|---|---|---|---|---|---|---|---|---|---|---|
| mm | in. | mm | in. | mm | in. | mm | in. | mm | in. | mm | in. |
| 80 | 3.15 | 80 | 3.15 | 51.5 | 2.01 | 50 | 1.97 | 65 | 2.56 | 49 | 1.93 |