Product datasheet

Specifications

Empty control station without hinges, Harmony XAP, XB2 SL, plastic, grey, undrilled, 85x146x87mm

XAPA1100

Main

Range Of Product	Harmony XAP
Product Or Component Type	Empty control station without hinges
Device Short Name	XAPA
Product Front Plate Size	85 x 146 mm
Usable Depth	83 mm
Number Of Cut-Out	Undrilled
Colour Of Base Of Enclosure	Grey
Colour Of Cover	Grey
Material	Glass reinforced polyester
Cable Entry	Undrilled
Device Mounting	Flush
Ip Degree Of Protection	IP65 conforming to IEC 60529 IP69 conforming to NF C 20-010 IP69K
Resistance To Chemical Agents	High resistant to acids High resistant to all solvents High resistant to bases High resistant to diesel High resistant to mineral salts High resistant to oils and greases High resistant to petrol High resistant to sea water

Complementary

Net Weight	0.47 kg
Flame Retardance	M3 conforming to CSTB VO conforming to UL 94

Environment

Protective Treatment	TC TH
Ambient Air Temperature For Storage	-40…70 °C
Ambient Air Temperature For Operation	-40…70 °C
Overvoltage Category	Class II conforming to IEC 60536 Class II conforming to NF C 20-030
Fire Resistance	850 °C conforming to NF C 20-455 960 °C conforming to IEC 92

Disclaimer: This documentation is not intended as a substitute for and is not to be used for determining suitability or reliability of these products for specific user applications

Packing Units

Unit Type Of Package 1	PCE
Number Of Units In Package 1	1
Package 1 Height	11.064 cm
Package 1 Width	9.000 cm
Package 1 Length	15.500 cm
Package 1 Weight	504.000 g
Unit Type Of Package 2	P06
Number Of Units In Package 2	113
Package 2 Height	75.000 cm
Package 2 Width	60.000 cm
Package 2 Length	80.000 cm
Package 2 Weight	71.873 kg

Contractual warranty

Warranty	18 months

Sustainability

Green Premium™ label is Schneider Electric's commitment to delivering products with best-in-class environmental performance. Green Premium promises compliance with the latest regulations, transparency on environmental impacts, as well as circular and low-CO_2 products.

Guide to assessing product sustainability is a white paper that clarifies global eco-label standards and how to interpret environmental declarations.

Learn more about Green Premium >

Guide to assess a product's sustainability >

Transparency RoHS/REACh

Well-being performance

Reach Free Of Svhc	
Toxic Heavy Metal Free	
Mercury Free	
Rohs Exemption Information	Yes

Certifications & Standards

Reach Regulation	REACh Declaration
Eu Rohs Directive	Pro-active compliance (Product out of EU RoHS legal scope) EU RoHS Declaration
China Rohs Regulation	China RoHS declaration
Environmental Disclosure	Product Environmental Profile
Circularity Profile	No need of specific recycling operations

Dimensions Drawings

Dimensions and Fixing

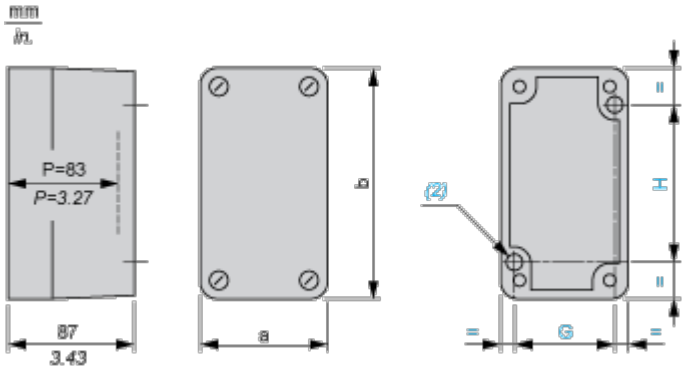

(2) 2 x Ø 5.6 mm/0.22 in. holes, depth 12 mm/0.47 in.

P Usable depth

a		b		G		H	
mm	in.	mm	in.	mm	in.	mm	in.
85	3.35	146	5.75	70	2.76	105	4.13