# Product datasheet

Specifications

Green Premium™

## Empty control station, Harmony XALD, XALK, plastic, dark grey lid, light grey base, 3 cut out, UL CSA certified

XALD03H7

## Main

| | |
|---|---|
| **Range Of Product** | Harmony XALD |
| **Product Or Component Type** | Empty control station |
| **Device Short Name** | XALD |
| **Product Destination** | For XB5 Ø 22 mm control and signalling units |
| **Number Of Cut-Out** | 3 cut-outs |
| **Colour Of Base Of Enclosure** | Light grey (RAL 7035) |
| **Colour Of Cover** | Dark grey (RAL 7016) |
| **Material** | Polycarbonate |
| **Cable Entry** | 2 knock-outs for cable entry, clamping capacity: 14 mm<br>2 knock-outs for Pg 13 cable gland and ISO M20, clamping capacity: 12 mm |
| **Ip Degree Of Protection** | IP66 conforming to IEC 60529<br>IP67<br>IP69<br>IP69K |

## Complementary

| | |
|---|---|
| **Assembly Style** | For customer assembly |
| **Number Of Horizontal Rows** | 1 |
| **Number Of Vertical Rows** | 3 |
| **Net Weight** | 0.238 kg |
| **Resistance To High Pressure Washer** | 7000000 Pa at 55 °C, distance : 0.1 m |
| **Mounting Of Block** | Rear mounting<br>Front mounting |
| **Electrical Composition Code** | PF2<br>MR1<br>SF1<br>MF2<br>SF2<br>SR2<br>SR1<br>PR1<br>PF1<br>MF1 |
| **Main Group** | 3 cut-outs |
| **Group Of Product** | UL-CSA grey |

## Environment

| | |
|---|---|
| **Protective Treatment** | TH |

Disclaimer: This documentation is not intended as a substitute for and is not to be used for determining suitability or reliability of these products for specific user applications

| | |
|---|---|
| **Ambient Air Temperature For Storage** | -40…70 °C |
| **Ambient Air Temperature For Operation** | -40…70 °C |
| **Overvoltage Category** | Class II conforming to IEC 60536 |
| **Nema Degree Of Protection** | NEMA 13<br>NEMA 4X |
| **Ik Degree Of Protection** | IK03 conforming to IEC 62262 |
| **Standards** | IEC 60947-5-4<br>CSA C22.2 No 14<br>IEC 60947-5-1<br>JIS C8201-5-1<br>IEC 60947-1<br>IEC 60947-5-5<br>UL 508<br>JIS C8201-1 |
| **Product Certifications** | UL<br>CSA |

## Packing Units

| | |
|---|---|
| **Unit Type Of Package 1** | PCE |
| **Number Of Units In Package 1** | 1 |
| **Package 1 Height** | 7.000 cm |
| **Package 1 Width** | 7.800 cm |
| **Package 1 Length** | 14.000 cm |
| **Package 1 Weight** | 234.000 g |
| **Unit Type Of Package 2** | S03 |
| **Number Of Units In Package 2** | 30 |
| **Package 2 Height** | 30 cm |
| **Package 2 Width** | 30 cm |
| **Package 2 Length** | 40 cm |
| **Package 2 Weight** | 7.443 kg |
| **Unit Type Of Package 3** | P06 |
| **Number Of Units In Package 3** | 240 |
| **Package 3 Height** | 77.000 cm |
| **Package 3 Width** | 60.000 cm |
| **Package 3 Length** | 80.000 cm |
| **Package 3 Weight** | 67.445 kg |

## Contractual warranty

| | |
|---|---|
| **Warranty** | 18 months |

## Sustainability

**Green Premium™ label** is Schneider Electric's commitment to delivering products with best-in-class environmental performance. Green Premium promises compliance with the latest regulations, transparency on environmental impacts, as well as circular and low-$CO_2$ products.

**Guide to assessing product sustainability** is a white paper that clarifies global eco-label standards and how to interpret environmental declarations.

Learn more about Green Premium >

Guide to assess a product's sustainability >

Transparency RoHS/REACh

## Well-being performance

| | |
|---|---|
| Reach Free Of Svhc | |
| Toxic Heavy Metal Free | |
| Mercury Free | |
| Rohs Exemption Information | Yes |

## Certifications & Standards

| | |
|---|---|
| **Reach Regulation** | REACh Declaration |
| **Eu Rohs Directive** | Pro-active compliance (Product out of EU RoHS legal scope)<br>EU RoHS Declaration |
| **China Rohs Regulation** | China RoHS declaration |
| **Environmental Disclosure** | Product Environmental Profile |
| **Circularity Profile** | End of Life Information |

## Dimensions Drawings

### Dimensions

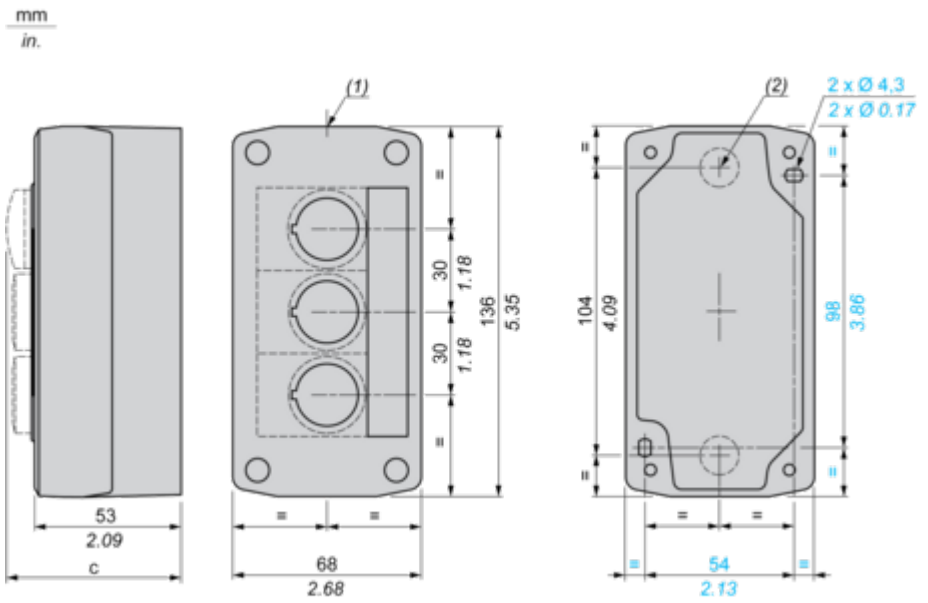


**(1)** 2 knock-outs for Pg 13.5 cable gland, maximum capacity 12 mm/0.47 in.
**(2)** Knock-out for cable entry, maximum capacity 14 mm/0.55 in.

| Control station fitted with: | c in mm | c in in. |
|---|---|---|
| Flush pushbutton | 62 | 2.44 |
| Illuminated pushbutton | 64 | 2.52 |
| Pilot light | 65.5 | 2.58 |
| Projecting pushbutton | 66 | 2.60 |
| Selector switch | 80 | 3.15 |
| Key switch | 105.5 | 4.15 |