Product datasheet

Specifications

Modicon TM3, Safety module, 2 Function, Cat 3 PL d/SIL CL2 (screw) 24 VDC

TM3SAFL5R

Main

Range Of Product	Modicon TM3 Safety
Product Or Component Type	Safety module
Device Short Name	TM3SAFL
Safety Module Application	For emergency stop, switch and safety light curtain monitoring
Function Of Module	Emergency stop monitoring 2-channel wiring Monitoring of a movable guard with 2 switches and automatic start Monitoring of a movable guard Multiple emergency stop monitoring 2-channel wiring Proximity sensor monitoring PNP/PNP Monitoring of electro-sensitive protection equipment (ESPE) PNP/PNP
Safety Level	Can reach PL d/category 3 conforming to ISO 13849-1: 2008 Can reach PL d/category 3 conforming to ISO 13849-2: 2012 Can reach SILCL 2 conforming to IEC 62061: 2005 Can reach SIL 2 conforming to IEC 61508: 2010

Complementary

Safety Reliability Data	DC = 95 % conforming to ISO 13849-1 PFHd = 5E-9 1/h conforming to IEC 61508-1 1 operation/hour DC-13 24 V DC, <4 A PFHd = 30E-9 1/h conforming to IEC 61508-1 60 operations/hour DC-13 24 V DC, <1 A MTTFd = 500 years conforming to ISO 13849-1 1 operation/hour DC-13 24 V DC, <4 A MTTFd = 85 years conforming to ISO 13849-1 60 operations/hour DC-13 24 V DC, <1 A SFF = 95 % conforming to IEC 61508-1 HFT = 1 conforming to IEC 61508-1 Type = A conforming to IEC 61508-1
Synchronisation Time Between Inputs	Unlimited

Disclaimer: This documentation is not intended as a substitute for and is not to be used for determining suitability or reliability of these products for specific user applications

Connections - Terminals	Captive screw clamp terminals, removable terminal block 1 x 0.2...1 x 2.5 mm² flexible without cable end 13-14, 23-24, 33-34 Captive screw clamp terminals, removable terminal block 1 x 0.2...1 x 2.5 mm² solid without cable end 13-14, 23-24, 33-34 Captive screw clamp terminals, removable terminal block 1 x 0.25...1 x 2.5 mm² flexible with cable end, with bezel 13-14, 23-24, 33-34 Captive screw clamp terminals, removable terminal block 1 x 0.25...1 x 2.5 mm² flexible with cable end, without bezel 13-14, 23-24, 33-34 Captive screw clamp terminals, removable terminal block 2 x 0.2...2 x 1.5 mm² flexible without cable end 13-14, 23-24, 33-34 Captive screw clamp terminals, removable terminal block 2 x 0.2...2 x 1.5 mm² solid without cable end 13-14, 23-24, 33-34 Captive screw clamp terminals, removable terminal block 2 x 0.25...2 x 1 mm² flexible with cable end, without bezel 13-14, 23-24, 33-34 Captive screw clamp terminals, removable terminal block 2 x 0.5...2 x 1.5 mm² flexible with cable end, with double bezel 13-14, 23-24, 33-34 Captive screw clamp terminals, removable terminal block 1 x 0.14...1 x 1.5 mm² flexible without cable end other terminals Captive screw clamp terminals, removable terminal block 1 x 0.14...1 x 1.5 mm² solid without cable end other terminals Captive screw clamp terminals, removable terminal block 1 x 0.25...1 x 0.5 mm² flexible with cable end, with bezel other terminals Captive screw clamp terminals, removable terminal block 1 x 0.25...1 x 1.5 mm² flexible with cable end, without bezel other terminals Captive screw clamp terminals, removable terminal block 2 x 0.14...2 x 0.5 mm² flexible without cable end other terminals Captive screw clamp terminals, removable terminal block 2 x 0.14...2 x 0.75 mm² solid without cable end other terminals Captive screw clamp terminals, removable terminal block 2 x 0.25...2 x 0.34 mm² flexible with cable end, without bezel other terminals Captive screw clamp terminals, removable terminal block 2 x 0.5 mm² flexible with cable end, with double bezel other terminals
Output Type	Relay instantaneous opening, 3 NO circuit(s), potential free
Number Of Safety Circuits	3 NO for relay instantaneous opening
Maximum Switching Voltage	230 V utilisation category AC-15 at 50 Hz (relay instantaneous opening) 24 V utilisation category DC-13 (relay instantaneous opening)
[Us] Rated Supply Voltage	24 V - 15...20 % DC
Power Consumption In W	0.2 W at 5 V DC 3.6 W at 24 V DC
Input Protection Type	Internal, electronic
[Uc] Control Circuit Voltage	24 V DC
Maximum Cable Distance Between Devices	30 m
Breaking Capacity	360 VA holding AC-15 B300 relay output 3600 VA inrush AC-15 B300 relay output
Breaking Capacity	4 A 24 V 50 ms DC-13 relay output
Output Thermal Current	6 A per relay for relay output
[Ith] Conventional Free Air Thermal Current	18 A
Associated Fuse Rating	4 A gG or gL for relay output conforming to IEC 60947-5-1 6 A fast blow for relay output conforming to IEC 60947-5-1
Minimum Output Current	10 mA for relay output
Output Voltage	10 V relay output
Maximum Response Time On Input Open	40 ms
[Ui] Rated Insulation Voltage	300 V (pollution degree 2) conforming to IEC 60647-5-1
[Uimp] Rated Impulse Withstand Voltage	4 kV overvoltage category III conforming to IEC 60647-5-1
Current Consumption	100 mA at 24 V DC external supply
Local Signalling	8 LEDs (green/red) for user
Electrical Connection	Screw terminal

Product Compatibility	Safety light curtains conforming to EN/IEC 61496-1 (type 4)
Standards	ISO 13849-1:2008 ISO 13849-2:2012 IEC 62061:2005 IEC 61508:2010 IEC 60947-5-1:2010 IEC 61131-2:2007 IEC 60204-1:2005 IEC 60204-1:2009/A1 IEC 61010-1:2010 EN 50581:2012
Product Certifications	TÜV RCM ANSI Haz Loc Class 1 Division 2 (pending) CSA Haz Loc Class 1 Division 2 (pending) EAC CSA 61010-2-201 (pending) UL 61010-2-201
Marking	CE EFUP 10 UL CSA EAC RCM TÜV
Electromagnetic Compatibility	Electrostatic discharge immunity test - test level: 8 kV (air discharge) conforming to IEC 61000-4-2 Electrostatic discharge immunity test - test level: 6 kV (contact discharge) conforming to IEC 61000-4-2 Susceptibility to electromagnetic fields - test level: 10 V/m (80 MHz to 1 GHz) conforming to IEC 61000-4-3 Susceptibility to electromagnetic fields - test level: 3 V/m (1.4 GHz...2 GHz) conforming to IEC 61000-4-3 Susceptibility to electromagnetic fields - test level: 1 V/m (2 GHz...3 GHz) conforming to IEC 61000-4-3 Magnetic field at power frequency - test level: 30 A/m (50...60 Hz) conforming to IEC 61000-4-8 Electrical fast transient/burst immunity test - test level: 3 kV (power lines (DC)) conforming to IEC 61000-4-4 Electrical fast transient/burst immunity test - test level: 2 kV (I/O) conforming to IEC 61000-4-4 1.2/50 µs shock waves immunity test - test level: 1 kV (power lines (DC)) conforming to IEC 61000-4-5 Conducted RF disturbances - test level: 10 V (0.15...80 MHz) conforming to IEC 61000-4-6 Radiated emission - test level: 40 dBµV/m class A (24 V) conforming to IEC 55011 Radiated emission - test level: 47 dBµV/m class A (24 V) conforming to IEC 55011
Mounting Support	Top hat type TH35-7.5 rail conforming to IEC 60715 Top hat type TH35-15 rail conforming to IEC 60715 wall mount using attached fasteners
Height	94 mm
Depth	73 mm
Width	43.7 mm
Net Weight	0.19 kg

Environment

Standards	IEC 60947-1 EN 1088/ISO 14119 ISO 13850 IEC 60947-5-1 IEC 60204-1
Resistance To Electrostatic Discharge	8 kV in air conforming to IEC 61000-4-2 6 kV on contact conforming to IEC 61000-4-2
Resistance To Electromagnetic Fields	10 V/m 80 MHz...1 GHz conforming to IEC 61000-4-3 3 V/m 1.4 GHz...2 GHz conforming to IEC 61000-4-3 1 V/m 2 GHz...3 GHz conforming to IEC 61000-4-3

Resistance To Magnetic Fields	30 A/m 50/60 Hz conforming to IEC 61000-4-8
Resistance To Fast Transients	3 kV for power lines (DC) (DC) conforming to IEC 61000-4-4 2 kV for I/O lines conforming to IEC 61000-4-4
Surge Withstand	1 kV power lines (DC) differential mode conforming to IEC 61000-4-5 DC 1 kV power lines (DC) common mode conforming to IEC 61000-4-5 DC
Resistance To Conducted Disturbances	10 V 0.15...80 MHz conforming to IEC 61000-4-6
Electromagnetic Emission	Radiated emissions - test level: 50 dBµV/m class A (24 V DC) at 30…230 Hz conforming to IEC 61131-3 Radiated emissions - test level: 57 dBµV/m class A (24 V DC) at 230…1000 Hz conforming to IEC 61131-3
Ambient Air Temperature For Operation	-10…55 °C horizontal installation
Ambient Air Temperature For Storage	-25…70 °C
Relative Humidity	10…95 %, without condensation (in operation) 10…95 %, without condensation (in storage)
Ip Degree Of Protection	IP20 (terminals) conforming to IEC 60529
Pollution Degree	2
Operating Altitude	0...2000 m
Storage Altitude	0…3000 m
Vibration Resistance	+/- 3.5 mm (f= 5…150 Hz) conforming to IEC 60068-2-6
Shock Resistance	15 gn for 11 ms conforming to IEC 60068-2-27
Mechanical Robustness	Bumps 6 ms 300 shocks (25 gn) conforming to IEC 60068-2-27

Packing Units

Unit Type Of Package 1	PCE
Number Of Units In Package 1	1
Package 1 Height	7.500 cm
Package 1 Width	10.600 cm
Package 1 Length	12.500 cm
Package 1 Weight	250.000 g
Unit Type Of Package 2	S03
Number Of Units In Package 2	18
Package 2 Height	30.000 cm
Package 2 Width	30.000 cm
Package 2 Length	40.000 cm
Package 2 Weight	5.434 kg

Sustainability

Green Premium™ label is Schneider Electric's commitment to delivering products with best-in-class environmental performance. Green Premium promises compliance with the latest regulations, transparency on environmental impacts, as well as circular and low-CO_2 products.

Guide to assessing product sustainability is a white paper that clarifies global eco-label standards and how to interpret environmental declarations.

Learn more about Green Premium >

Guide to assess a product's sustainability >

Transparency RoHS/REACh

Well-being performance

Mercury Free	
Rohs Exemption Information	Yes
Pvc Free	

Certifications & Standards

Reach Regulation	REACh Declaration
Eu Rohs Directive	Pro-active compliance (Product out of EU RoHS legal scope)
China Rohs Regulation	China RoHS declaration
Environmental Disclosure	Product Environmental Profile
Weee	The product must be disposed on European Union markets following specific waste collection and never end up in rubbish bins
Circularity Profile	End of Life Information

Dimensions Drawings

Dimensions

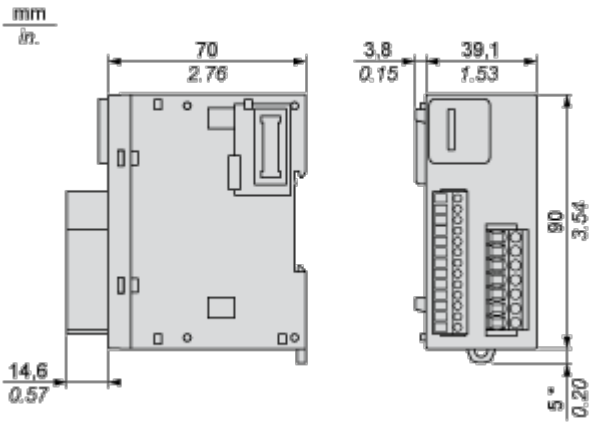

(*) 8.5 mm/0.33 in when the clamp is pulled out.

Mounting and Clearance

Spacing Requirements

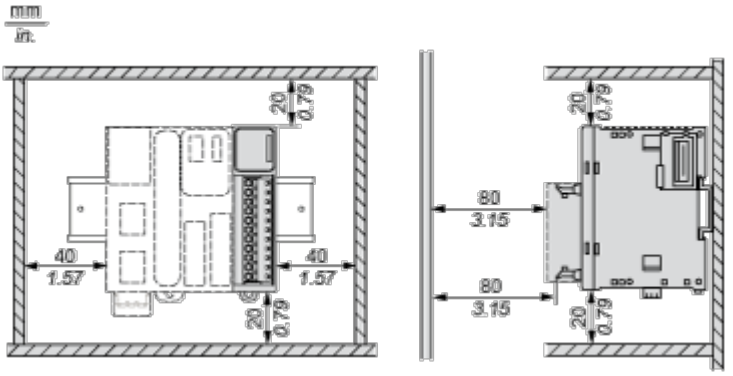

Mounting on a Rail

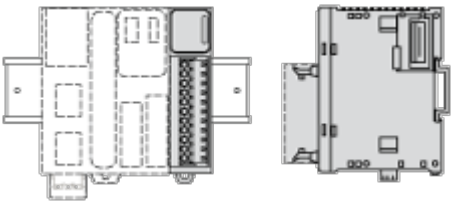

Incorrect Mounting

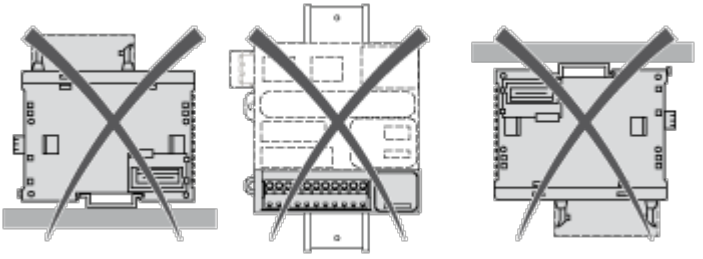

Mounting on a Panel Surface

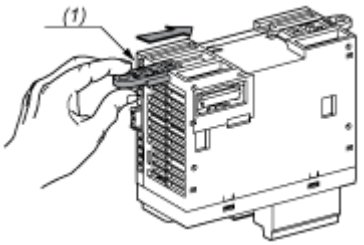

(1) Install a mounting strip

Mounting Hole Layout

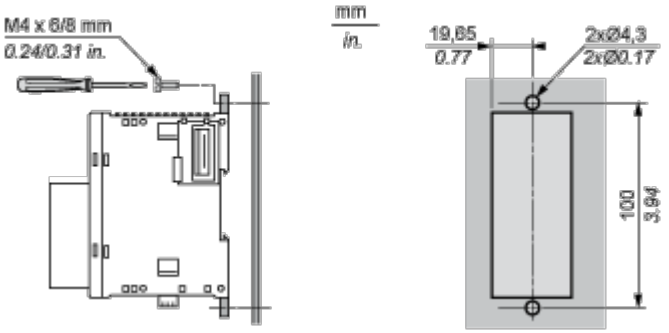

Connections and Schema

Emergency Stop Wiring Diagram

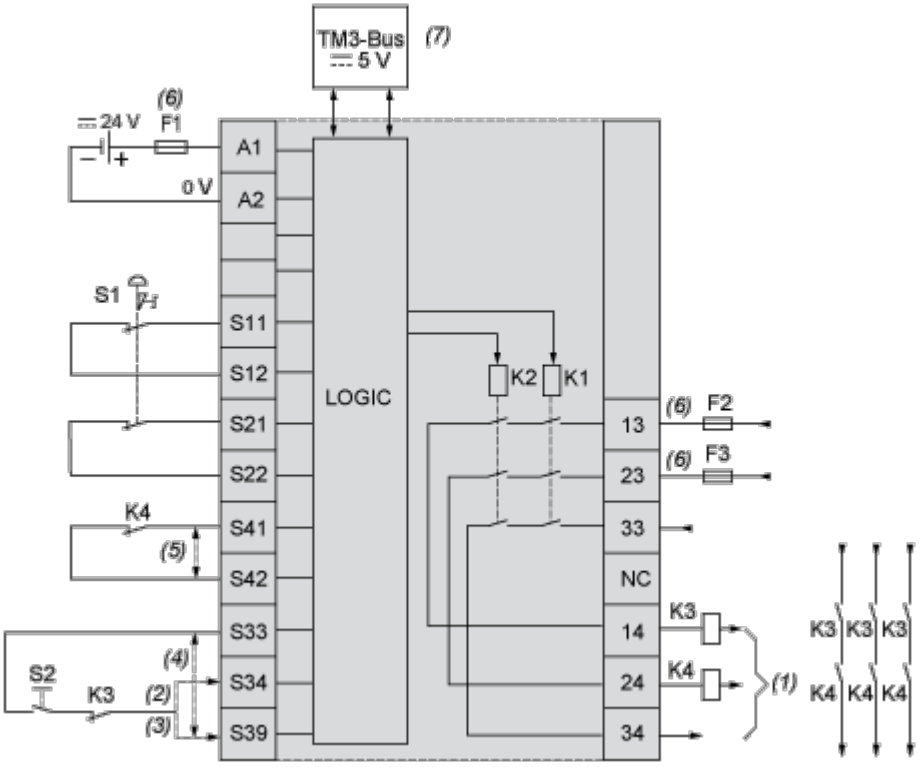

S1 : Emergency stop switch

S2 : Start switch

(1) Safety outputs

(2) Monitored start

(3) Non-monitored start

(4) For automatic start, directly connect [S33] and [S39] terminals

(5) Second external device monitoring channel. Connect [S41] and [S42] terminals if not used

(6) Fuses. Refer to technical specifications for fuse values

(7) Non-safety related TM3 Bus communication with logic controller

Protective Guard Wiring

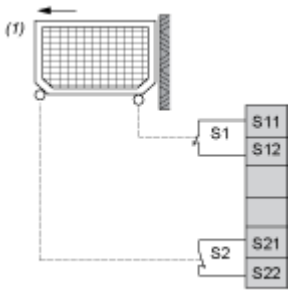

(1) Protective guard

Electro-Sensitive Protective Equipment (ESPE) Wiring

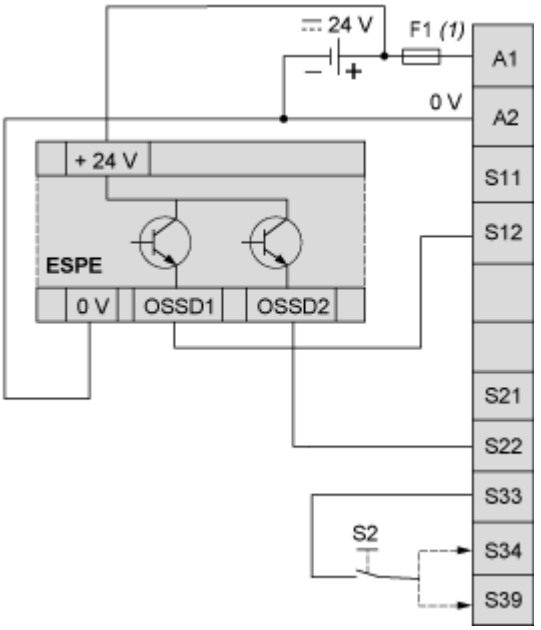

(1) Fuses. Refer to electrical characteristics for fuse values

S2: Start switch

NOTE: The ESPE must be supplied by the same PELV/SELV power supply as the safety module