# Product datasheet

Specifications

Green Premium™

## EEV Driver, Actuator

TM171VEVA2

Discontinued on: 31 Dec 2020

End-of-service on: 30 June 2021

Discontinued

## Main

| | |
|---|---|
| **Range Of Product** | Modicon M171 |
| **Product Or Component Type** | Controller |

## Complementary

| | |
|---|---|
| **Input/Output Number** | 2 (total)<br>1 analog input(s)<br>1 digital output(s) |
| **Sensor Power Supply** | 5 V DC |
| **Discrete Output Number** | 1 for open collector |
| **Analogue Input Number** | 1 analog input NTC, range: 4...20 mA or 0...5 V or 0...10 V |
| **[Us] Rated Supply Voltage** | 24 V +/- 10 % AC/DC |
| **Display Type** | Without display |
| **Mounting Support** | DIN rail |
| **Width** | 70.2 mm |
| **Height** | 87 mm |
| **Depth** | 61.6 mm |

## Environment

| | |
|---|---|
| **Marking** | CE |
| **Ambient Air Temperature For Operation** | -5…50 °C |
| **Ip Degree Of Protection** | IP20 |

## Packing Units

| | |
|---|---|
| **Unit Type Of Package 1** | PCE |
| **Number Of Units In Package 1** | 1 |
| **Package 1 Height** | 9.1 cm |
| **Package 1 Width** | 13 cm |
| **Package 1 Length** | 18.5 cm |
| **Package 1 Weight** | 280 g |

Disclaimer: This documentation is not intended as a substitute for and is not to be used for determining suitability or reliability of these products for specific user applications

## Sustainability

**Green Premium™ label** is Schneider Electric's commitment to delivering products with best-in-class environmental performance. Green Premium promises compliance with the latest regulations, transparency on environmental impacts, as well as circular and low-$CO_2$ products.

**Guide to assessing product sustainability** is a white paper that clarifies global eco-label standards and how to interpret environmental declarations.

Learn more about Green Premium >

Guide to assess a product's sustainability >

Transparency RoHS/REACh

## Resource performance

Upgradeable Through Digital Modules And Upgraded Components

## Well-being performance

Mercury Free

| | |
|---|---|
| Rohs Exemption Information | Yes |

## Certifications & Standards

| | |
|---|---|
| **Reach Regulation** | REACh Declaration |
| **Eu Rohs Directive** | Pro-active compliance (Product out of EU RoHS legal scope) |
| **China Rohs Regulation** | China RoHS declaration |
| **Environmental Disclosure** | Product Environmental Profile |
| **Weee** | The product must be disposed on European Union markets following specific waste collection and never end up in rubbish bins |
| **Circularity Profile** | End of Life Information |

Mounting and Clearance

## Mounting and Clearance

### DIN Rail Mounting

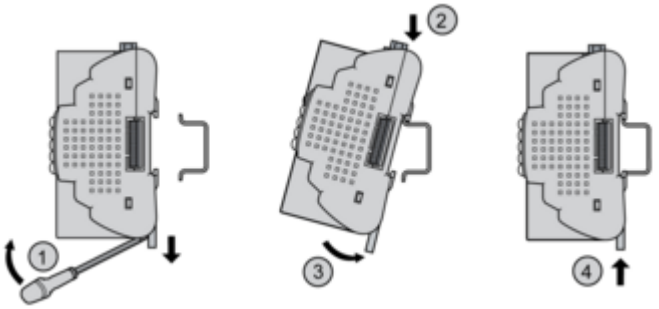


### Clips for Panel Mounting

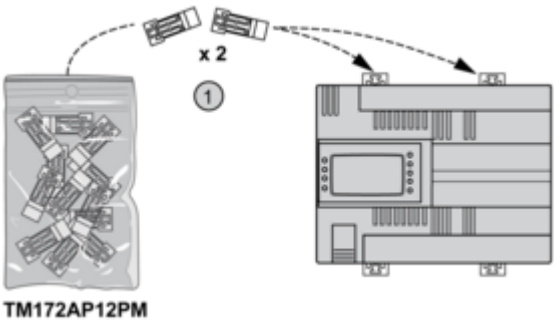


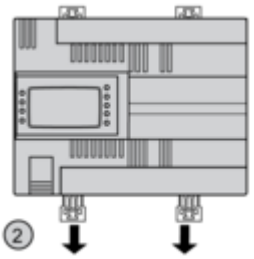


### Panel Mounting

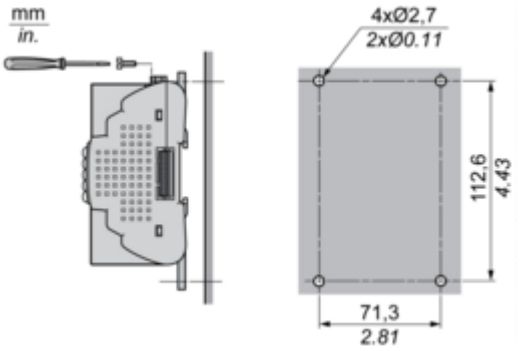


### Clearance

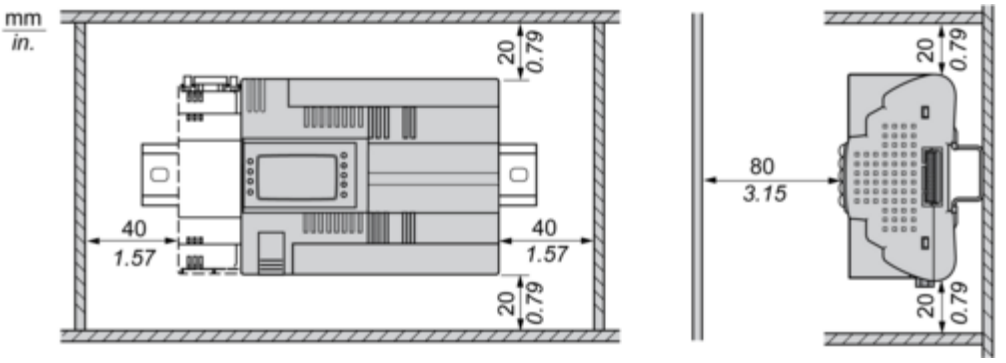


### Incorrect Mounting Position

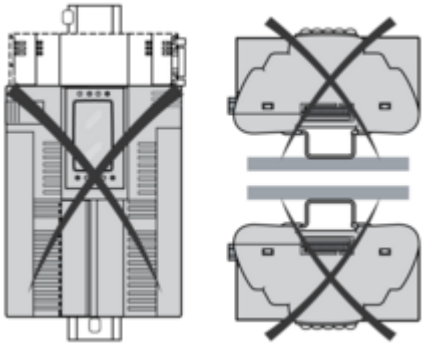

### Assembling a Module

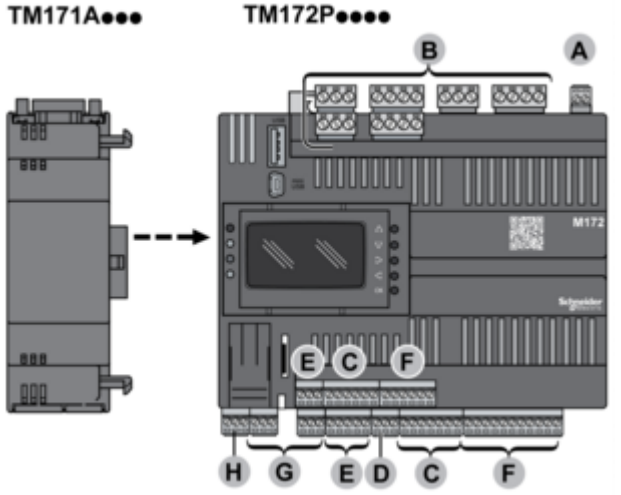


### Wiring Sections and Torque

A, C, D, E, F, G, H

| mm 9 0.35 in. | | | | | | | | |
|---|---|---|---|---|---|---|---|---|
| mm² | 0.14…1.5 | 0.14…1.5 | 0.25…1.5 | 0.25…0.5 | 2 x 0.08…0.5 | 2 x 0.08…0.75 | 2 x 0.25…0.34 | 2 x 0.5 |
| AWG | 26…16 | 26…16 | 22…16 | 22…20 | 2 x 28…20 | 2 x 28…20 | 2 x 24…22 | 2 x 20 |

| | | | |
|---|---|---|---|
| Ø 2,5 mm (0.1 in.) | C | N•m | 0.22...0.25 |
| | | lb-in | 1.95...2.21 |

B

| mm / in. 7 / 0.28 | | | | | | | | |
|---|---|---|---|---|---|---|---|---|
| mm² | 0.2...2.5 | 0.2...2.5 | 0.25...2.5 | 0.25...2.5 | 2 x 0.2...1 | 2 x 0.2...1.5 | 2 x 0.25...1 | 2 x 0.5...1.5 |
| AWG | 24...14 | 24...14 | 22...14 | 22...14 | 2 x 24...18 | 2 x 24...16 | 2 x 22...18 | 2 x 20...16 |

| | | | |
|---|---|---|---|
| Ø 3,5 mm (0.14 in.) | C | N•m | 0.5...0.6 |
| | | lb-in | 4.42...5.31 |

## Connections and Schema

### Power Supply

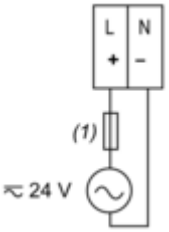


**(1)** Type T fuse 3,15 A

## Wiring Diagram

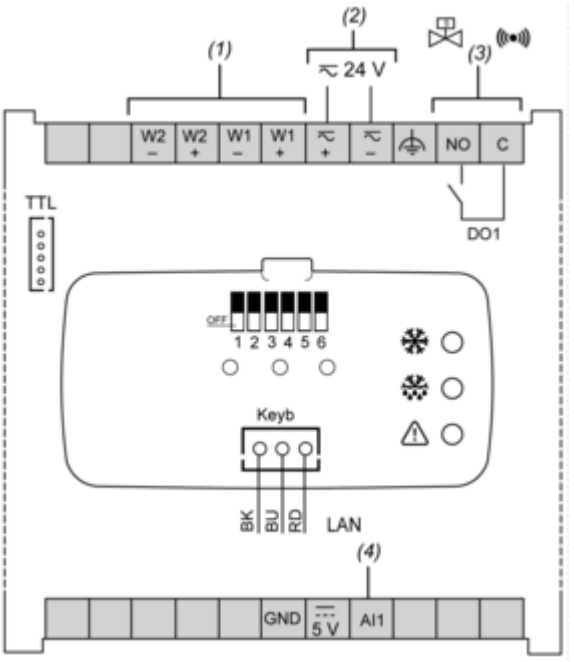


| | |
|---|---|
| (1) | Electronic Expansion Valve output |
| (2) | Power supply 24 V ac/dc |
| (3) | DO1: Relay output 5 A 250 Vac (Solenoid valve/Alarm)<br>C: Common - NO: Normally Open |
| (4) | Analog inputs<br>GND - Ground |