Product datasheet

Specifications

Green Premium™

Controller, Modicon M171/M172/ M173, optimized optimized, display 14 IO, Modbus, 100-240V AC

TM171ODM14R

Main

Range Of Product	Modicon M171/M172
Product Or Component Type	Controller
Product Specific Application	HVAC and pumping solution
Variant	Programmable
Total Inputs/Outputs	14
Discrete Input Number	2
Discrete Output Number	1 for relay outputs SPDT with independent common 3 for relay outputs SPST with same common
Discrete Output Current	2 A for relay
Analogue Input Number	2 configurable 3 analog input NTC
Analogue Output Number	2 voltage, range: 0...10 V 2 PWM/PPM, range: 20 kHz, 12 V, 35 mA 1 voltage/current, range: 0...20 mA/4...20 mA

Complementary

Number Of Port	1 LAN expansion bus 1 RS485 - screw terminal block (Modbus serial link)
Input/Output Number	5 analog output(s) 4 digital output(s) 5 analog input(s)
Discrete Input Logic	Sink or source (positive/negative)
Contacts Usage	Volt-free contacts
Analogue Input Type	voltage 0...5 V (ratiometric) voltage 0...10 V NTC temperature probe - 50...100 °C - resolution: 0.1 °C Pt 1000 temperature probe - 50...400 °C - resolution: 0.1 °C current 0...20 mA/4...20 mA voltage 0...1 V
Sensor Power Supply	12 V DC at 85 mA 5 V DC at 20 mA
[Us] Rated Supply Voltage	100...240 V +/- 10 % AC
Realtime Clock	Built-in clock at -20…55 °C
Display Type	Four 7-segment display units
Overvoltage Category	II
Local Signalling	6 LEDs (red) 5 LEDs (green) 7 LEDs (amber) for programmable
Mounting Support	DIN rail

Disclaimer: This documentation is not intended as a substitute for and is not to be used for determining suitability or reliability of these products for specific user applications

Width	70.2 mm
Height	87 mm
Depth	61.7 mm
Net Weight	0.19 kg

Environment

Directives	86/188/EEC - physical agents (noise) directive 2006/95/EC - low voltage directive
Standards	EN/IEC 60730
Product Certifications	CE EAC CSA cURus
Ambient Air Temperature For Operation	-20…55 °C conforming to UL 60730-1
Ambient Air Temperature For Storage	-40…85 °C
Relative Humidity	10…90 % non-condensing
Ip Degree Of Protection	IP20
Pollution Degree	2

Packing Units

Unit Type Of Package 1	PCE
Number Of Units In Package 1	1
Package 1 Height	13.200 cm
Package 1 Width	9.000 cm
Package 1 Length	18.500 cm
Package 1 Weight	300.000 g
Unit Type Of Package 2	S02
Number Of Units In Package 2	6
Package 2 Height	15.000 cm
Package 2 Width	30.000 cm
Package 2 Length	40.000 cm
Package 2 Weight	2.056 kg

Sustainability

Green Premium™ label is Schneider Electric's commitment to delivering products with best-in-class environmental performance. Green Premium promises compliance with the latest regulations, transparency on environmental impacts, as well as circular and low-CO_2 products.

Guide to assessing product sustainability is a white paper that clarifies global eco-label standards and how to interpret environmental declarations.

Learn more about Green Premium >

Guide to assess a product's sustainability >

Transparency RoHS/REACh

Resource performance

Upgradeable Through Digital Modules And Upgraded Components

Well-being performance

Mercury Free

Rohs Exemption Information	Yes

Certifications & Standards

Reach Regulation	REACh Declaration
Eu Rohs Directive	Pro-active compliance (Product out of EU RoHS legal scope)
China Rohs Regulation	China RoHS declaration
Environmental Disclosure	Product Environmental Profile
Weee	The product must be disposed on European Union markets following specific waste collection and never end up in rubbish bins
Circularity Profile	End of Life Information

Dimensions Drawings

Dimensions

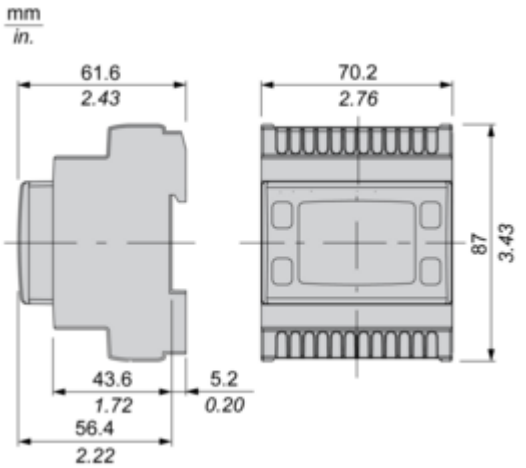

Mounting and Clearance

Mounting and Clearance

Clearance

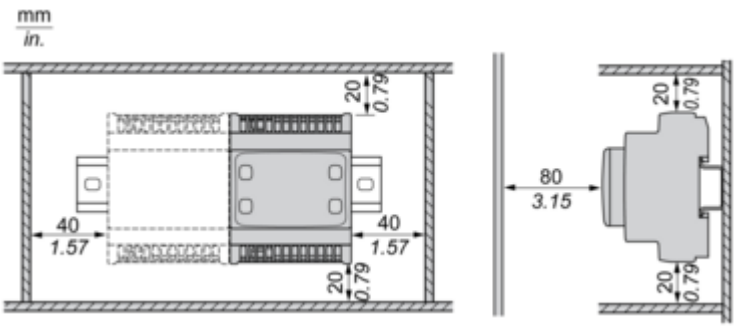

Misplacement

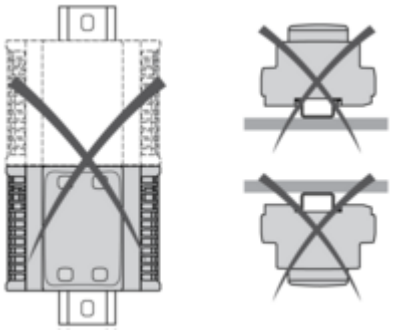

Connections and Schema

Power Supply

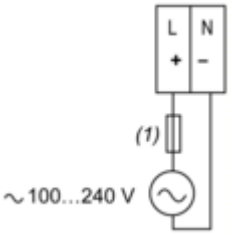

(1) Type T fuse 160 mA

Wiring Diagram

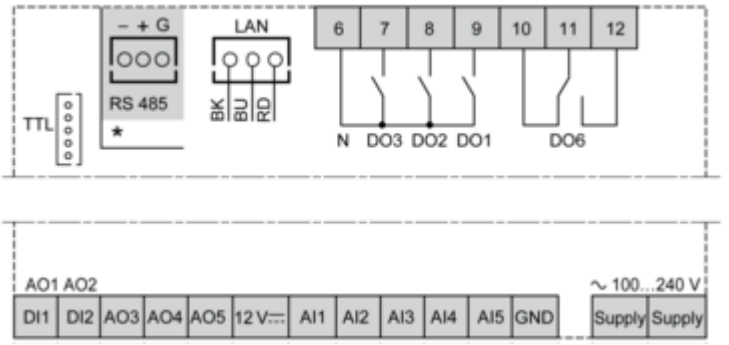

N : Neutral
GND : Ground
BK : Black
BU : Blue
RD : Red
AI : Analogue input
AO : Analogue output
DI : Digital input
DO : Digital output