Product datasheet

Specifications

Green Premium™

circuit breaker, EasyPact CVS100B, 25kA at 415VAC, 32A, TM-D trip unit, 3P3d

LV510302

Main

Range	EasyPact
Product Name	EasyPact CVS
Device Short Name	CVS100B
Product Or Component Type	Circuit breaker
Device Application	Distribution
Poles Description	3P
Protected Poles Description	3D
Earth Leakage Protection (Vigi Add On)	Without
[In] Rated Current	32 A at 40 °C
Network Type	AC
Utilisation Category	Category A
[Icu] Breaking Capacity	40 kA Icu at 220/240 V AC 50/60 Hz conforming to IEC 60947-2 25 kA Icu at 380/415 V AC 50/60 Hz conforming to IEC 60947-2 20 kA Icu at 440 V AC 50/60 Hz conforming to IEC 60947-2
Trip Unit Name	TM-D
Trip Unit Technology	Thermal-magnetic
Trip Unit Rating	32 A at 40 °C
Protection Type	Overload protection (thermal) Short-circuit protection (magnetic)

Complementary

[Uimp] Rated Impulse Withstand Voltage	8 kV conforming to EN/IEC 60947-2
Network Frequency	50/60 Hz
Breaking Capacity Code	B
[Ics] Rated Service Breaking Capacity	15 kA at 440 V AC 50/60 Hz conforming to IEC 60947-2 25 kA at 380/415 V AC 50/60 Hz conforming to IEC 60947-2 40 kA at 220/240 V AC 50/60 Hz conforming to IEC 60947-2
Mechanical Durability	30000 cycles
Electrical Durability	12000 cycles 415 V In conforming to IEC 60947-2
Control Type	Toggle
Thermal Protection Adjustment Range	22.4…32 A
Long Time Pick-Up Adjustment Type Ir	Adjustable
Long Time Pick-Up Adjustment Range	0.7...1 x In

Disclaimer: This documentation is not intended as a substitute for and is not to be used for determining suitability or reliability of these products for specific user applications

Long Time Delay Adjustment Type	Fixed
Instantaneous Pick-Up Adjustment Type Ii	Fixed
Instantaneous Pick-Up Adjustment Range	400 A
Contact Position Indicator	Yes
Mounting Mode	Fixed
Mounting Support	Backplate
Upside Connection	Front
Downside Connection	Front
Connections - Terminals	Screw connection
Connection Pitch	35 mm
Compatibility Code	CVS100
Width	105 mm
Depth	86 mm
Height	161 mm
Net Weight	1.5 kg

Environment

Standards	IEC 60947-2 EN 60947-2
Product Certifications	IEC GOST
Electrical Shock Protection Class	Class II
Pollution Degree	3 conforming to IEC 60664-1
Ip Degree Of Protection	IP40
Ambient Air Temperature For Operation	-25…70 °C
Ambient Air Temperature For Storage	-50…85 °C

Packing Units

Unit Type Of Package 1	PCE
Number Of Units In Package 1	1
Package 1 Height	11.500 cm
Package 1 Width	14.000 cm
Package 1 Length	19.000 cm
Package 1 Weight	1.702 kg
Unit Type Of Package 2	S03
Number Of Units In Package 2	8
Package 2 Height	30.000 cm
Package 2 Width	30.000 cm
Package 2 Length	40.000 cm
Package 2 Weight	14.036 kg
Unit Type Of Package 3	P12
Number Of Units In Package 3	64

Package 3 Height	45.000 cm
Package 3 Width	80.000 cm
Package 3 Length	120.000 cm
Package 3 Weight	124.288 kg

Contractual warranty

Warranty	18 months

Sustainability

Green Premium™ label is Schneider Electric's commitment to delivering products with best-in-class environmental performance. Green Premium promises compliance with the latest regulations, transparency on environmental impacts, as well as circular and low-CO_2 products.

Guide to assessing product sustainability is a white paper that clarifies global eco-label standards and how to interpret environmental declarations.

Learn more about Green Premium >

Guide to assess a product's sustainability >

Transparency RoHS/REACh

Well-being performance

Mercury Free

Rohs Exemption Information	Yes

Certifications & Standards

Reach Regulation	REACh Declaration
Eu Rohs Directive	Compliant with Exemptions
China Rohs Regulation	China RoHS declaration Product out of China RoHS scope. Substance declaration for your information
Environmental Disclosure	Product Environmental Profile
Weee	The product must be disposed on European Union markets following specific waste collection and never end up in rubbish bins
Circularity Profile	No need of specific recycling operations

Dimensions Drawings

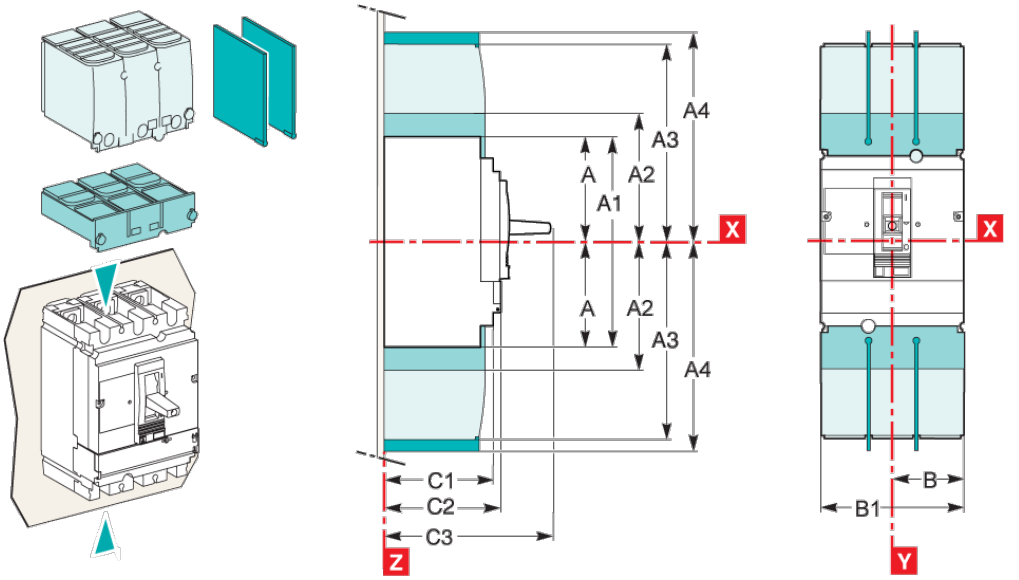

Type	A	A1	A2	A3	A4	A5	A6	A7	A8	A9	B	B1	B2	C1	C2	C3	E1
CVS100/160/250	80.5	161	64	145	179.5	155.5	236	169	220	253.5	52.5	105	140	81	66	111[1]	62.5
CVS400/630	127.5	255	142.5	200	237	227.5	355	242.5	300	337	70	140	185	95.5	110	168	100
Type	**E2**	**E3**	**E4**	**E5**	**E6**	**E7**	**E8**	**F1**	**F2**	**F3**	**G1**	**G2**	**G3**	**G4**	**G5**	**ØT**	**U**
CVS100/160/250	125	70	140	137.5	200	145	215	35	17.5	70	55	75	13.5	33	17.5	24	y 32
CVS400/630	200	113.5	227	200	300	213.5	327	45	22.5	90	-	-	-	-	-	32	y 35

[1] C3=126mm for EasyPact CVS2500/F.

Assembly

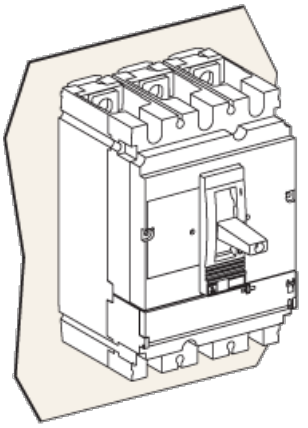

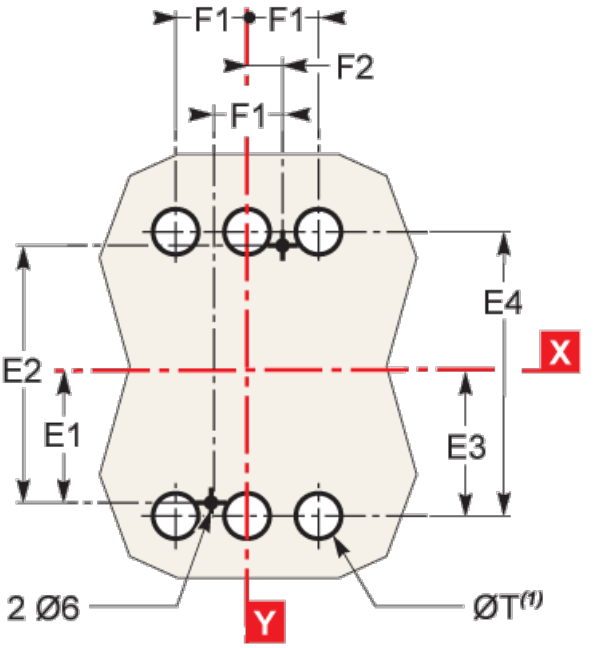

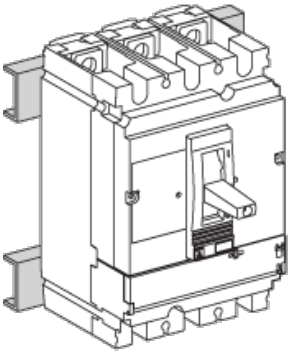

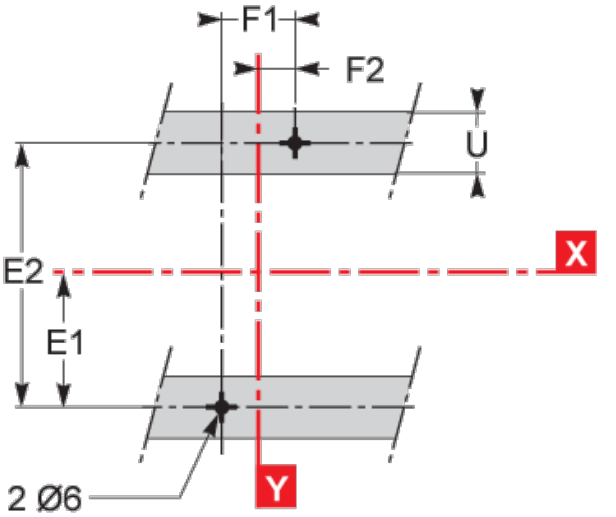

Type	A	A1	A2	A3	A4	A5	A6	A7	A8	A9	B	B1	B2	C1	C2	C3	E1
CVS100/160/250	80.5	161	84	145	170.5	155.5	226	169	220	253.5	52.5	105	140	91	66	111(2)	62.5
CVS400/630	127.5	255	142.5	200	237	227.5	355	242.5	300	337	70	140	185	95.5	110	168	100
Type	**E2**	**E3**	**E4**	**E5**	**E6**	**E7**	**E8**	**F1**	**F2**	**F3**	**G1**	**G2**	**G3**	**G4**	**G5**	**ØT**	**U**
CVS100/160/250	125	70	140	137.5	200	145	215	35	17.5	70	55	75	13.5	33	17.5	24	y 32
CVS400/630	200	113.5	227	200	300	213.5	327	45	22.5	90	-	-	-	-	-	32	y 35

(2) C3=126mm for EasyPact CVS2500/F.
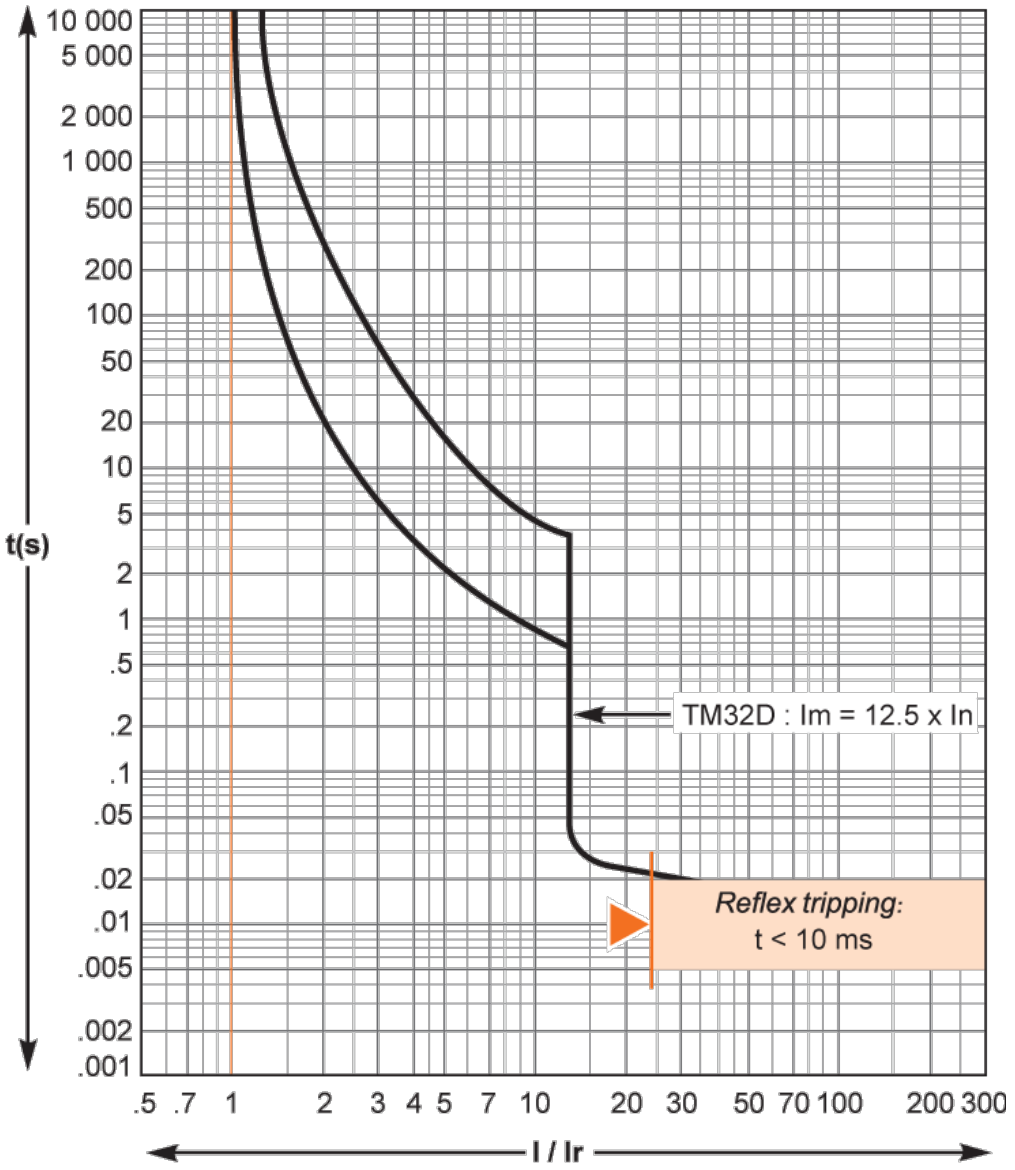
Performance Curves