# Product datasheet

Specifications

Green Premium™

## advanced touchscreen panel, Harmony GTO, 640 x 480pixels VGA, 7.5inch TFT, 96MB

HMIGTO4310

## Main

| | |
|---|---|
| **Range Of Product** | Harmony GTO |
| **Product Or Component Type** | Advanced touchscreen panel |
| **Display Colour** | 65536 colours |
| **Display Size** | 7.5 inch |
| **Supply** | External source |
| **Operating System** | Harmony |
| **Battery Type** | Lithium battery for internal RAM, autonomy: 100 days, charging time = 5 day(s), battery life = 10 year(s) |

## Complementary

| | |
|---|---|
| **Terminal Type** | Touchscreen display |
| **Display Type** | Backlit colour TFT LCD |
| **Display Resolution** | 640 x 480 pixels VGA |
| **Touch Sensitive Zone** | 1024 x 1024 |
| **Touch Panel** | Resistive film, 1000000 cycles |
| **Backlight Lifespan** | 50000 hours white at 25 °C |
| **Brightness** | 16 levels - control by touch panel<br>16 levels - control by software |
| **Character Font** | Korean<br>Taiwanese (traditional Chinese)<br>Japanese (ANK, Kanji)<br>ASCII<br>Chinese (simplified Chinese) |
| **[Us] Rated Supply Voltage** | 24 V DC |
| **Supply Voltage Limits** | 19.2…28.8 V |
| **Inrush Current** | 30 A |
| **Maximum Power Consumption In W** | 8 W when power is not supplied to external devices<br>5 W when backlight is OFF<br>5.5 W when backlight is dimmed<br>12 W |
| **Local Signalling** | Status LED green, steady for offline<br>Status LED green, steady for operating<br>Status LED orange, flashing for software starting up<br>Status LED red, steady for power supply (ON)<br>Status LED clear, faded for power supply (OFF)<br>COM2 LED yellow, steady for data is being transmitted<br>COM2 LED yellow, faded for no data transmission<br>SD card LED green, steady for card is inserted<br>SD card LED green, faded for card is not inserted or is not being accessed |
| **Software Designation** | Vijeo Designer configuration software >= V6.1 |

Disclaimer: This documentation is not intended as a substitute for and is not to be used for determining suitability or reliability of these products for specific user applications

| | |
|---|---|
| **Memory Description** | Flash EPROM, 96 MB |
| **Data Backed Up** | 512 KB internal RAM (SRAM) |
| **Data Storage Equipment** | SD card, <= 32 GB<br>SDHC card, <= 32 GB |
| **Downloadable Protocols** | Schneider Electric Modicon Modbus<br>Schneider Electric Modicon Uni-TE<br>Schneider Electric Modicon Modbus Plus<br>Schneider Electric Modicon FIPWAY<br>Mitsubishi Melsec third party protocols<br>Omron Sysmac third party protocols<br>Rockwell Automation Allen-Bradley third party protocols<br>Siemens Simatic third party protocols<br>Schneider Electric Modicon Modbus TCP |
| **Integrated Connection Type** | COM1 serial link SUB-D 9, interface: RS232C, transmission rate: 2400...115200 bps<br>COM2 serial link RJ45, interface: RS485, transmission rate: 2400...115200 bps<br>COM2 serial link RJ45, interface: RS485, transmission rate: 187.5 kbps compatible with Siemens MPI<br>Ethernet RJ45, interface: 10BASE-T/100BASE-TX<br>Ethernet RJ45, interface: IEEE 802.3<br>USB 2.0 type A<br>USB 2.0 type mini B |
| **Product Mounting** | Flush mounting |
| **Fixing Mode** | By 4 screw clamps |
| **Front Material** | PPT |
| **Enclosure Material** | PPT |
| **Type Of Cooling** | Natural convection |
| **Width** | 218 mm |
| **Height** | 173 mm |
| **Depth** | 60 mm |
| **Net Weight** | 1.2 kg |

# Environment

| | |
|---|---|
| **Standards** | IEC 61131-2<br>IEC 61000-6-2<br>UL 508 |
| **Product Certifications** | CE<br>cULus<br>KCC<br>C-Tick<br>UKCA<br>UKEX |
| **Ambient Air Temperature For Operation** | 0…55 °C |
| **Ambient Air Temperature For Storage** | -20…60 °C |
| **Relative Humidity** | 10…90 % without condensation |
| **Operating Altitude** | < 2000 m |
| **Ip Degree Of Protection** | IP20 (rear panel) conforming to IEC 60529<br>IP65 (front panel) conforming to IEC 60529 |
| **Nema Degree Of Protection** | NEMA 4X front panel (indoor use) |
| **Shock Resistance** | 147 m/s² 3 chocks in each direction X, Y and Z conforming to IEC 61131-2 |
| **Vibration Resistance** | 3.5 mm (f = 5…9 Hz) - X, Y, Z directions for 10 cycles (approx. 100 min) - conforming to IEC 61131-2<br>1 gn (f = 9…150 Hz) - X, Y, Z directions for 10 cycles (approx. 100 min) - conforming to IEC 61131-2 |
| **Resistance To Electrostatic Discharge** | 6 kV contact discharge conforming to IEC 61000-4-2 level 3 |

## Packing Units

| | |
|---|---|
| **Unit Type Of Package 1** | PCE |
| **Number Of Units In Package 1** | 1 |
| **Package 1 Height** | 14.500 cm |
| **Package 1 Width** | 26.400 cm |
| **Package 1 Length** | 30.500 cm |
| **Package 1 Weight** | 1.532 kg |
| **Unit Type Of Package 2** | P12 |
| **Number Of Units In Package 2** | 64 |
| **Package 2 Height** | 105.000 cm |
| **Package 2 Width** | 80.000 cm |
| **Package 2 Length** | 120.000 cm |
| **Package 2 Weight** | 124.000 kg |

## Contractual warranty

| | |
|---|---|
| **Warranty** | 18 months |

## Sustainability

**Green Premium™ label** is Schneider Electric's commitment to delivering products with best-in-class environmental performance. Green Premium promises compliance with the latest regulations, transparency on environmental impacts, as well as circular and low-$CO_2$ products.

**Guide to assessing product sustainability** is a white paper that clarifies global eco-label standards and how to interpret environmental declarations.

Learn more about Green Premium >

Guide to assess a product's sustainability >

Transparency RoHS/REACh

## Well-being performance

Mercury Free

| | |
|---|---|
| Rohs Exemption Information | Yes |

## Certifications & Standards

| | |
|---|---|
| **Reach Regulation** | REACh Declaration |
| **Eu Rohs Directive** | Pro-active compliance (Product out of EU RoHS legal scope) |
| **China Rohs Regulation** | China RoHS declaration |
| **Environmental Disclosure** | Product Environmental Profile |
| **Weee** | The product must be disposed on European Union markets following specific waste collection and never end up in rubbish bins |
| **Circularity Profile** | End of Life Information |

Dimensions Drawings

## Dimensions

### External Dimensions

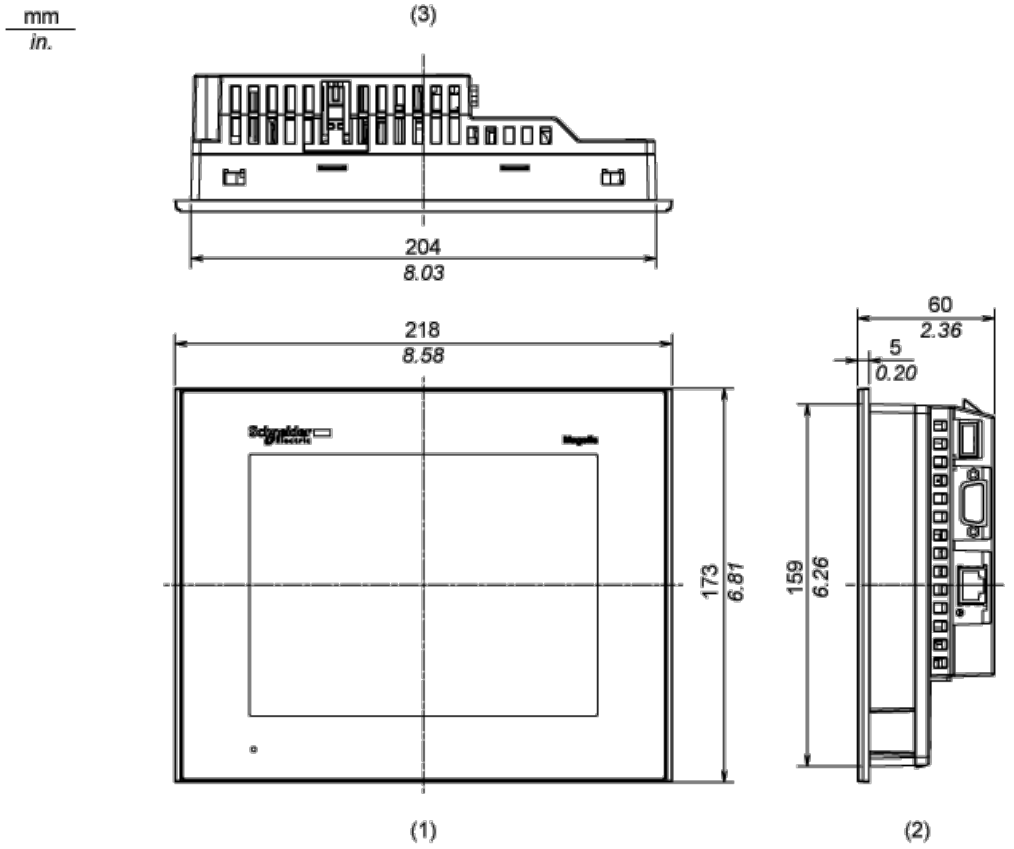


1 Front

2 Right Side

3 Top

### Installation with Installation Fasteners

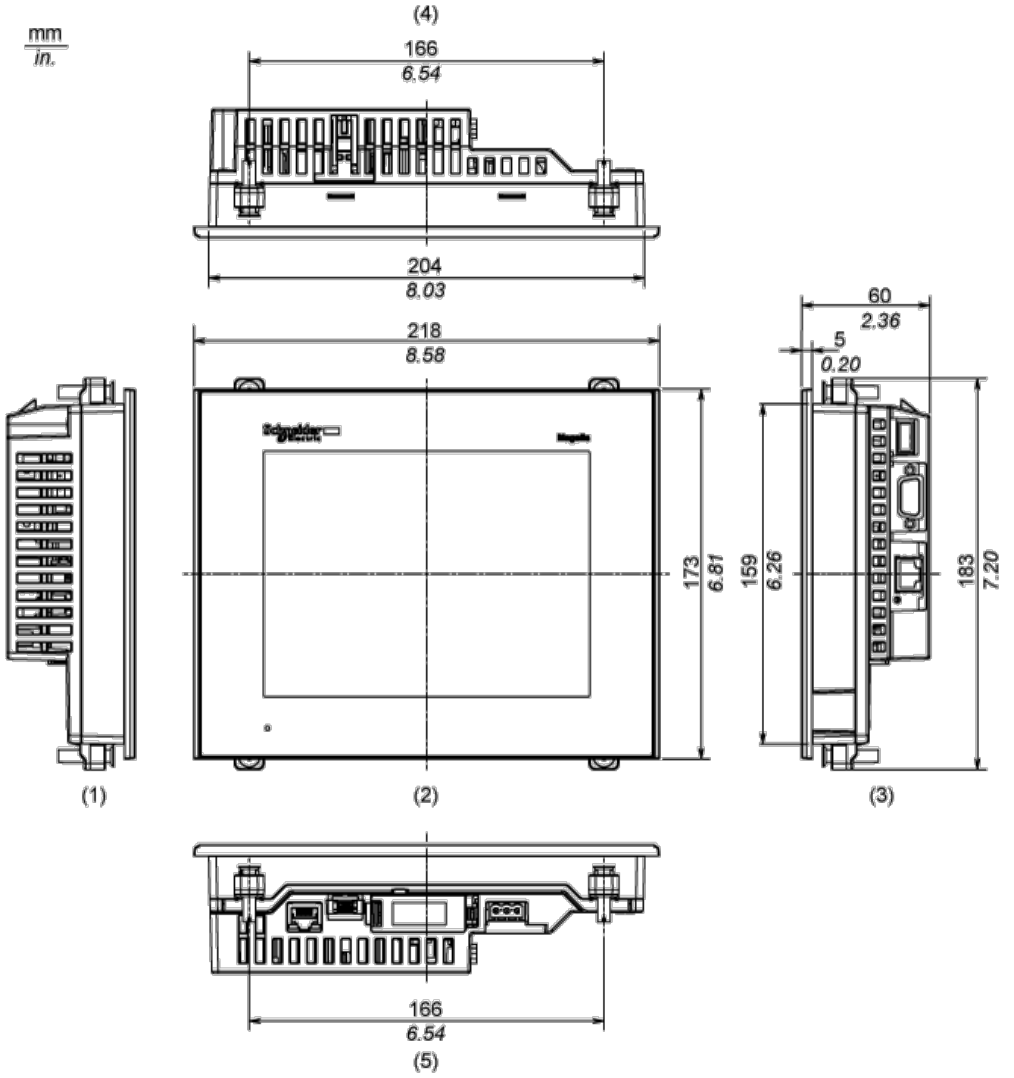


1 Left Side

2 Front

3 Right Side

4 Top

5 Bottom

### Dimensions with Cables

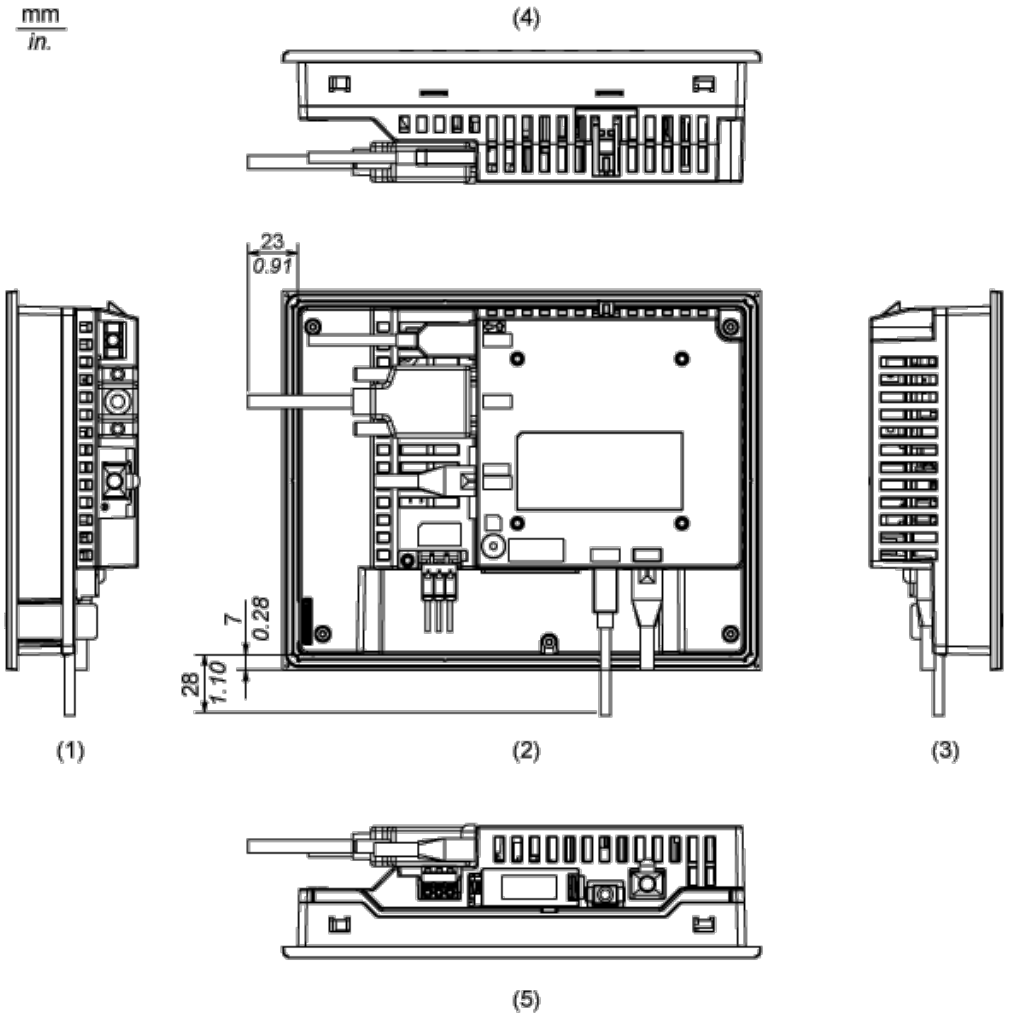


1 Left Side

2 Rear

3 Right Side

4 Top

5 Bottom

Mounting and Clearance

## Mounting

### Panel Cut Dimensions

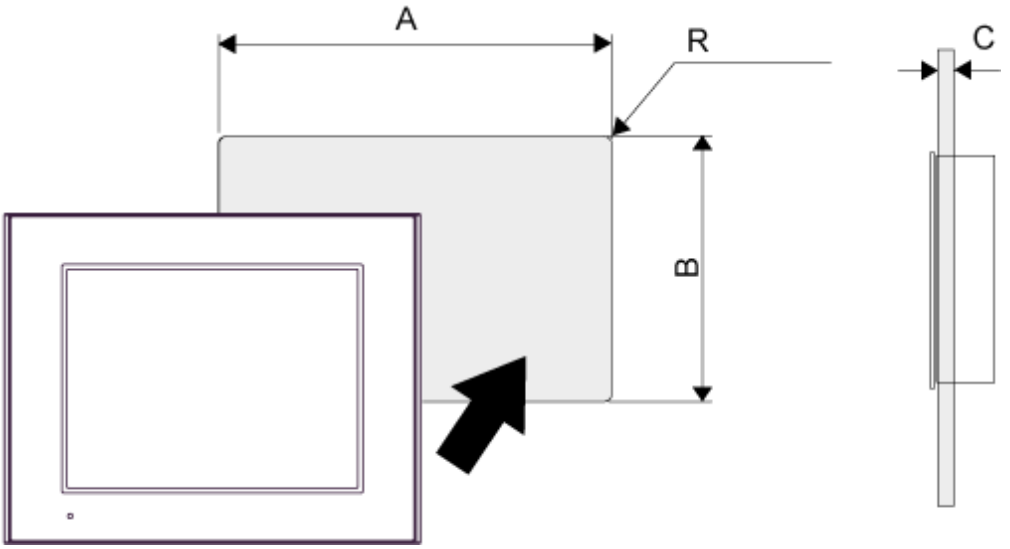


| A | | B | | C | | R | |
|---|---|---|---|---|---|---|---|
| mm | in. | mm | in. | mm | in. | mm | in. |
| 204.5 (+1, -0) | 8.05 (+0.04, -0) | 159.5 (+1, -0) | 6.28 (+0.04, -0) | 1.6...5 | 0.06...0.2 | 3 max. | 0.12 max. |

### Installation Fastener Dimensions

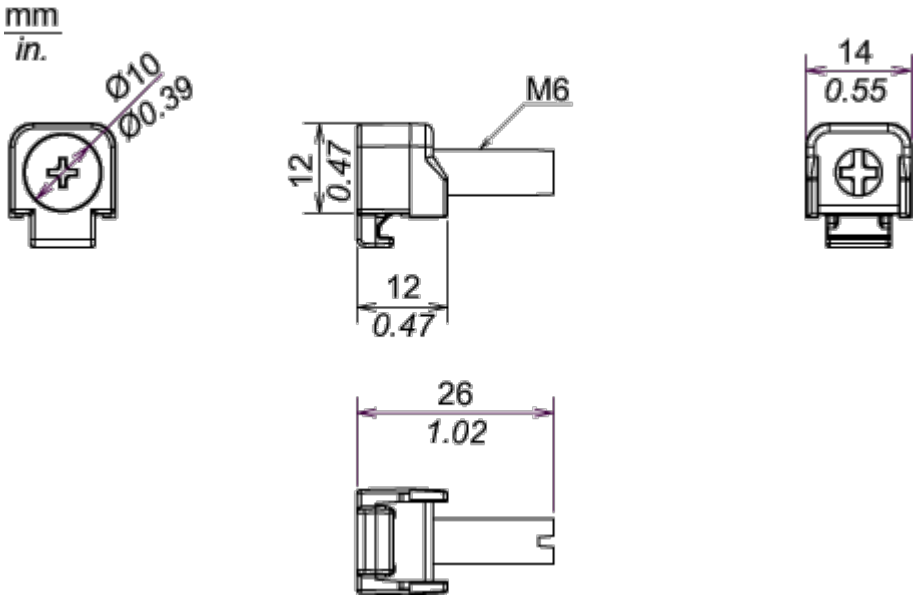

## Installation Requirements

### Mounting Angle

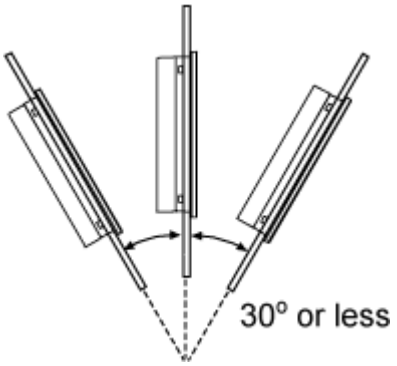


When installing the panel in a slanted position with an incline more than 30°, the ambient temperature must not exceed 40 °C (104 °F). You may need to use forced air cooling (fan,A/C) to ensure the ambient operating temperature is 40°C or less (104 °F or less).
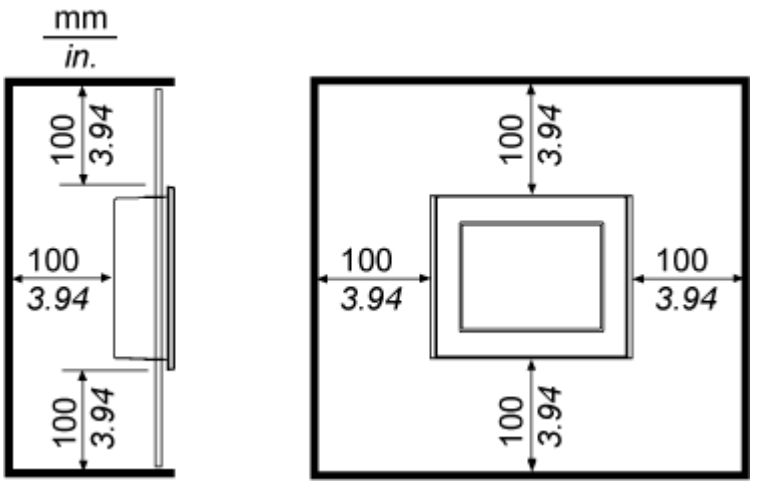
### Clearance