Product datasheet

Specifications

power supply module, Modicon X80, 24V DC, 16.8W

BMXCPS2010

Main

Range Of Product	Modicon X80
Product Or Component Type	Power supply module
Backplane Compatibility	Not compatible with BMEXBP..02
Primary Voltage	24 V isolated
Supply Circuit Type	DC
Secondary Power	16.8 W 24 V DC I/O module power supply and processor 8.3 W 3.3 V DC I/O module logic power supply

Complementary

Primary Voltage Limit	18...31.2 V
Input Current	1 A 24 V
Inrush Current	30 A 24 V
I²T On Activation	0.6 A².s 24 V
It On Activation	0.15 A.s 24 V
Mtbf Reliability	4886000 H
Protection Type	Internal fuse not accessible for primary circuit Overload protection for secondary circuit, 24 V sensor power supply Overvoltage protection for secondary circuit, 24 V sensor power supply Short-circuit protection for secondary circuit, 24 V sensor power supply
Current At Secondary Voltage	0.7 A 24 V DC I/O module power supply and processor 2.5 A 3.3 V DC I/O module logic power supply
Maximum Power Dissipation In W	8.5 W
Status Led	1 LED (green) rack voltage OK
Control Type	RESET push-button cold restart
Electrical Connection	1 connector 2 pin(s)alarm relay 1 connector 5 pin(s)line supply, protective earth, 24 V DC input sensor
Maximum Cable Distance Between Devices	20 m power supply cable copper 1.5 mm² 30 m power supply cable copper 2.5 mm²
Insulation Resistance	>= 10 MOhm primary/ground >= 10 MOhm primary/secondary
Net Weight	0.29 kg

Environment

Immunity To Microbreaks	1 ms
Dielectric Strength	1500 V primary/ground 1500 V primary/secondary

Disclaimer: This documentation is not intended as a substitute for and is not to be used for determining suitability or reliability of these products for specific user applications

Vibration Resistance	3 gn
Shock Resistance	30 gn
Ip Degree Of Protection	IP20
Directives	2014/35/EU - low voltage directive 2014/30/EU - electromagnetic compatibility
Ambient Air Temperature For Storage	-40…85 °C
Ambient Air Temperature For Operation	0…60 °C
Relative Humidity	5…95 % at 55 °C without condensation
Protective Treatment	TC
Operating Altitude	0...2000 m 2000...5000 m with derating factor

Packing Units

Unit Type Of Package 1	PCE
Number Of Units In Package 1	1
Package 1 Height	13.238 cm
Package 1 Width	15.451 cm
Package 1 Length	15.597 cm
Package 1 Weight	420.0 g
Unit Type Of Package 2	S04
Number Of Units In Package 2	12
Package 2 Height	30 cm
Package 2 Width	40 cm
Package 2 Length	60 cm
Package 2 Weight	6.31 kg
Unit Type Of Package 3	P06
Number Of Units In Package 3	48
Package 3 Height	75 cm
Package 3 Width	60 cm
Package 3 Length	80 cm
Package 3 Weight	32 kg

Contractual warranty

Warranty	18 months

Sustainability

Green Premium™ label is Schneider Electric's commitment to delivering products with best-in-class environmental performance. Green Premium promises compliance with the latest regulations, transparency on environmental impacts, as well as circular and low-CO_2 products.

Guide to assessing product sustainability is a white paper that clarifies global eco-label standards and how to interpret environmental declarations.

Learn more about Green Premium >

Guide to assess a product's sustainability >

Transparency RoHS/REACh

Well-being performance

Mercury Free

Rohs Exemption Information	Yes

Certifications & Standards

Reach Regulation	REACh Declaration
Eu Rohs Directive	Pro-active compliance (Product out of EU RoHS legal scope)
China Rohs Regulation	China RoHS declaration
Environmental Disclosure	Product Environmental Profile
Weee	The product must be disposed on European Union markets following specific waste collection and never end up in rubbish bins
Circularity Profile	End of Life Information

Dimensions Drawings

Modules Mounted on Racks

Dimensions

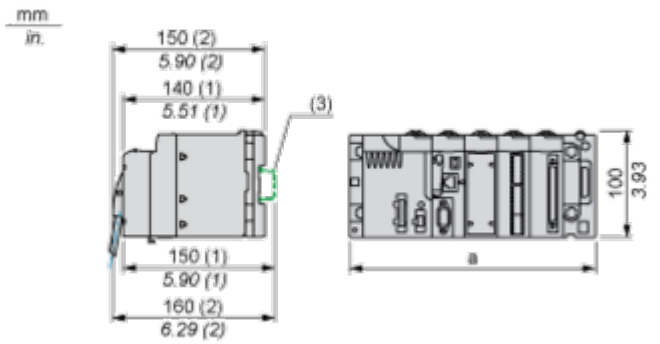

(1) With removable terminal block (cage, screw or spring).
(2) With FCN connector.
(3) On AM1 ED rail: 35 mm wide, 15 mm deep. Only possible with BMXXBP0400/0400H/0600/0600H/0800/0800H rack.

Rack references	a in mm	a in in.
BMXXBP0400 and BMXXBP0400H	242.4	09.54
BMXXBP0600 and BMXXBP0600H	307.6	12.11
BMXXBP0800 and BMXXBP0800H	372.8	14.68
BMXXBP1200 and BMXXBP1200H	503.2	19.81

Connections and Schema

Connection of Direct Current Power Supply Modules to a 24 Vdc or 48 Vdc Floating Direct Current Network

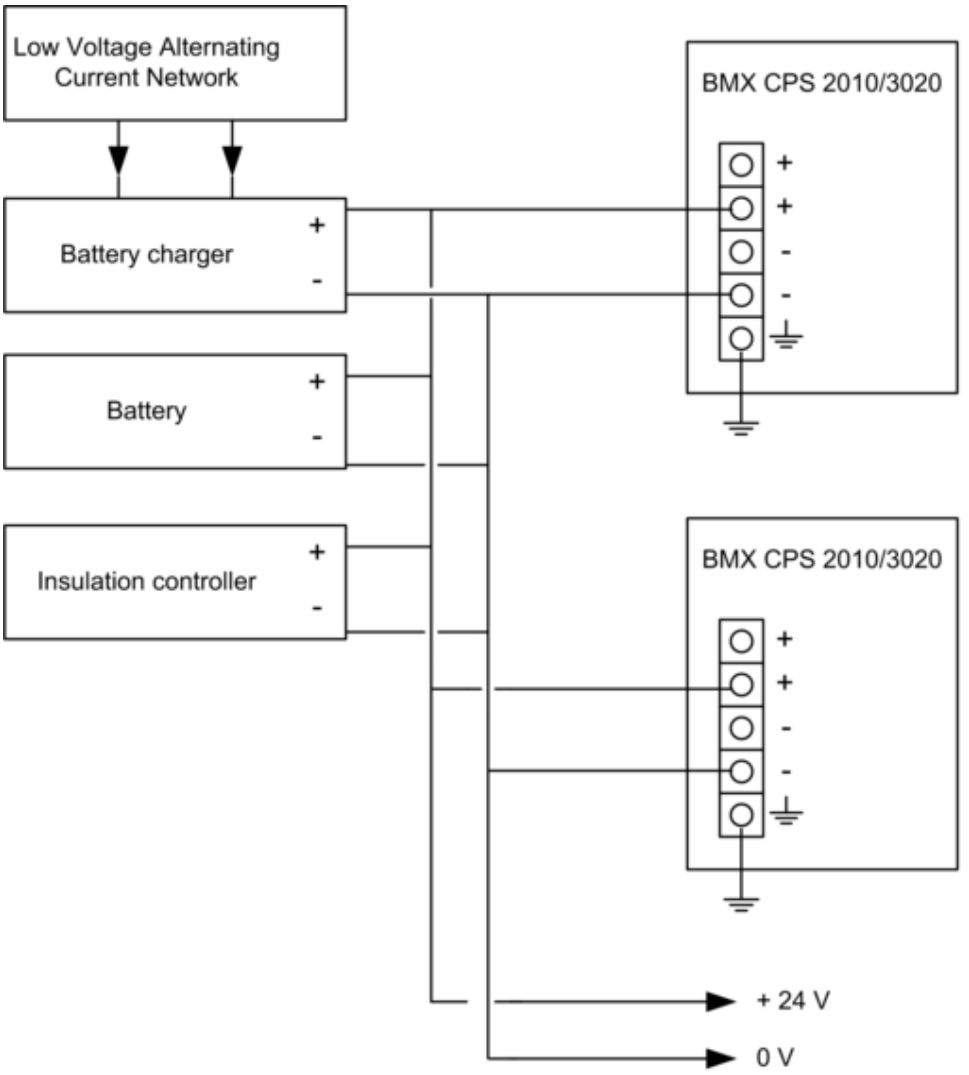

24 VDC floating network for the power supply of sensors, actuators and input/out modules.

Connection of Direct Current Power Supply Modules to an Alternating Current Network

Connection of a Single Rack PLC Station

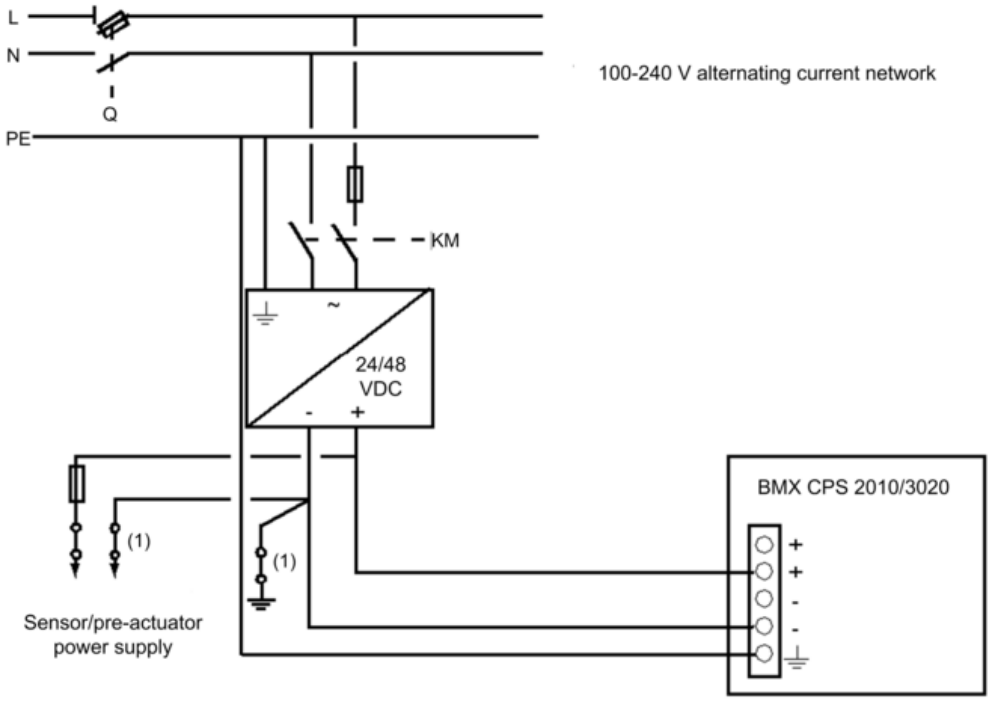

Q General isolator
KM Line contactor or circuit breaker
(1) Insulation connector bar for locating grounding errors

Connection of a Multi-Rack PLC Station

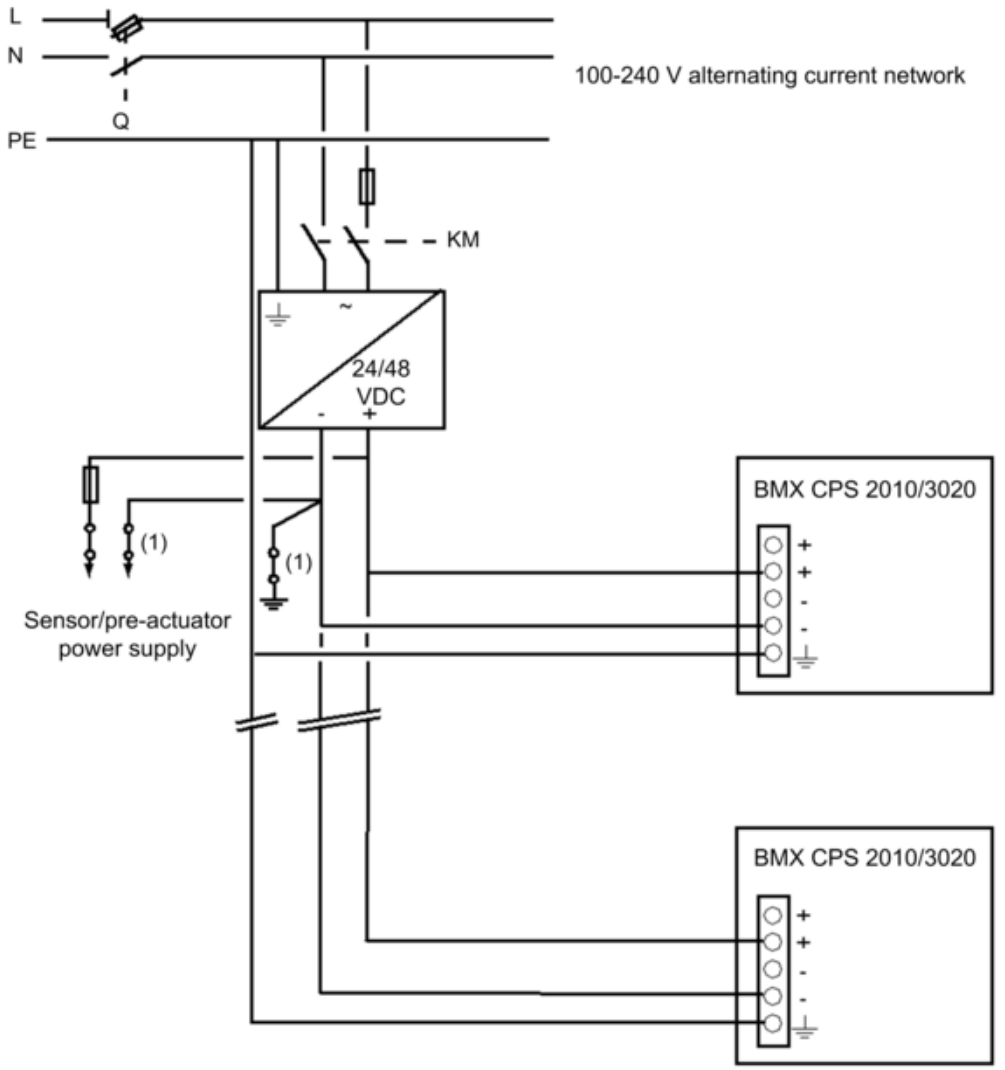

Q General isolator
KM Line contactor or circuit breaker
(1) Insulation connector bar for locating grounding errors