# Product datasheet

Specifications

Green Premium™

## power supply module, Modicon X80, 100 to 240V AC, 20W

BMXCPS2000

## Main

| | |
|---|---|
| **Range Of Product** | Modicon X80 |
| **Product Or Component Type** | Power supply module |
| **Backplane Compatibility** | Not compatible with BMEXBP..02 |
| **Primary Voltage** | 100...240 V |
| **Supply Circuit Type** | AC |
| **Secondary Power** | 10.8 W 24 V DC sensor power supply<br>16.8 W 24 V DC I/O module power supply and processor<br>8.3 W 3.3 V DC I/O module logic power supply |

## Complementary

| | |
|---|---|
| **Primary Voltage Limit** | 85...264 V |
| **Network Frequency** | 50/60 Hz |
| **Network Frequency Limits** | 47…63 Hz |
| **Apparent Power** | 0.07 kVA |
| **Input Current** | 0.31 A 240 V<br>0.61 A 115 V |
| **Inrush Current** | 30 A 120 V<br>60 A 240 V |
| **I²T On Activation** | 12 A².s 240 V |
| **It On Activation** | 0.06 A.s 240 V<br>0.03 A.s 120 V |
| **Mtbf Reliability** | 4638000 H |
| **Protection Type** | Internal fuse not accessible for primary circuit<br>Overload protection for secondary circuit<br>Overvoltage protection for secondary circuit<br>Short-circuit protection for secondary circuit |
| **Current At Secondary Voltage** | 0.45 A 24 V DC sensor power supply<br>0.7 A 24 V DC I/O module power supply and processor<br>2.5 A 3.3 V DC I/O module logic power supply |
| **Maximum Power Dissipation In W** | 8.5 W |
| **Status Led** | 1 LED (green) rack voltage OK<br>1 LED (green) sensor voltage |
| **Control Type** | RESET push-button cold restart |
| **Electrical Connection** | 1 connector 2 pin(s)alarm relay<br>1 connector 5 pin(s)line supply, protective earth, 24 V DC input sensor |
| **Insulation Resistance** | >= 100 MOhm primary/ground<br>>= 100 MOhm primary/secondary |
| **Net Weight** | 0.3 kg |

Disclaimer: This documentation is not intended as a substitute for and is not to be used for determining suitability or reliability of these products for specific user applications

## Environment

| | |
|---|---|
| **Immunity To Microbreaks** | 1 ms |
| **Dielectric Strength** | 1500 V primary/secondary I/O module logic power supply<br>1500 V primary/secondary I/O module power supply and processor<br>2300 V primary/secondary sensor power supply<br>1500 V primary/ground<br>500 V 24 V sensor output/ground |
| **Vibration Resistance** | 3 gn |
| **Shock Resistance** | 30 gn |
| **Ip Degree Of Protection** | IP20 |
| **Directives** | 2014/35/EU - low voltage directive<br>2014/30/EU - electromagnetic compatibility |
| **Ambient Air Temperature For Storage** | -40…85 °C |
| **Ambient Air Temperature For Operation** | 0…60 °C |
| **Relative Humidity** | 5…95 % at 55 °C without condensation |
| **Protective Treatment** | TC |
| **Operating Altitude** | 0...2000 m<br>2000...5000 m with derating factor |

## Packing Units

| | |
|---|---|
| **Unit Type Of Package 1** | PCE |
| **Number Of Units In Package 1** | 1 |
| **Package 1 Height** | 13.386 cm |
| **Package 1 Width** | 15.245 cm |
| **Package 1 Length** | 15.424 cm |
| **Package 1 Weight** | 438.8 g |
| **Unit Type Of Package 2** | S04 |
| **Number Of Units In Package 2** | 12 |
| **Package 2 Height** | 30 cm |
| **Package 2 Width** | 40 cm |
| **Package 2 Length** | 60 cm |
| **Package 2 Weight** | 6.5 kg |
| **Unit Type Of Package 3** | P06 |
| **Number Of Units In Package 3** | 48 |
| **Package 3 Height** | 75 cm |
| **Package 3 Width** | 60 cm |
| **Package 3 Length** | 80 cm |
| **Package 3 Weight** | 38 kg |

## Contractual warranty

| | |
|---|---|
| **Warranty** | 18 months |

## Sustainability

**Green Premium™ label** is Schneider Electric's commitment to delivering products with best-in-class environmental performance. Green Premium promises compliance with the latest regulations, transparency on environmental impacts, as well as circular and low-$CO_2$ products.

**Guide to assessing product sustainability** is a white paper that clarifies global eco-label standards and how to interpret environmental declarations.

Learn more about Green Premium >

Guide to assess a product's sustainability >

Transparency RoHS/REACh

## Well-being performance

Mercury Free

| | |
|---|---|
| Rohs Exemption Information | Yes |

## Certifications & Standards

| | |
|---|---|
| **Reach Regulation** | REACh Declaration |
| **Eu Rohs Directive** | Pro-active compliance (Product out of EU RoHS legal scope) |
| **China Rohs Regulation** | China RoHS declaration |
| **Environmental Disclosure** | Product Environmental Profile |
| **Weee** | The product must be disposed on European Union markets following specific waste collection and never end up in rubbish bins |
| **Circularity Profile** | End of Life Information |

# Dimensions Drawings

## Modules Mounted on Racks

### Dimensions

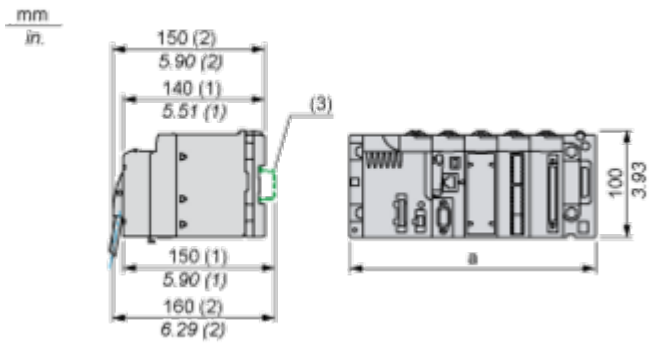


**(1)** With removable terminal block (cage, screw or spring).
**(2)** With FCN connector.
**(3)** On AM1 ED rail: 35 mm wide, 15 mm deep. Only possible with BMXXBP0400/0400H/0600/0600H/0800/0800H rack.

| Rack references | a in mm | a in in. |
|---|---|---|
| BMXXBP0400 and BMXXBP0400H | 242.4 | 09.54 |
| BMXXBP0600 and BMXXBP0600H | 307.6 | 12.11 |
| BMXXBP0800 and BMXXBP0800H | 372.8 | 14.68 |
| BMXXBP1200 and BMXXBP1200H | 503.2 | 19.81 |

## Connections and Schema

### Connection of Alternating Current Power Supply Modules

#### Connection of a PLC Station Constituted of a Single Rack

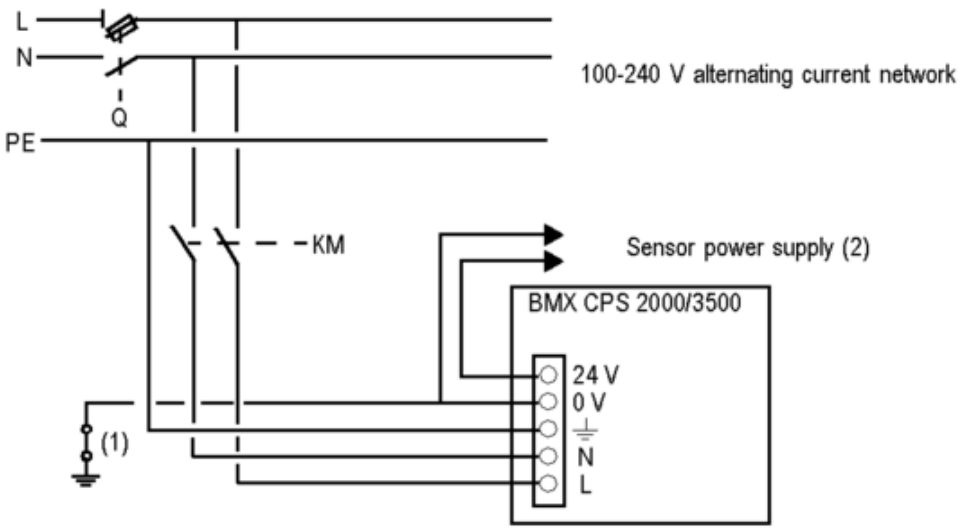


**Q** General isolator
**KM** Line contactor or circuit breaker
**(1)** Insulation connector bar for locating grounding errors
**(2)** Available current of 0.45 A for the BMXCPS2000 module or 0.9 A for the BMXCPS3500 module

#### Connection of a PLC Station Constituted of Several Racks

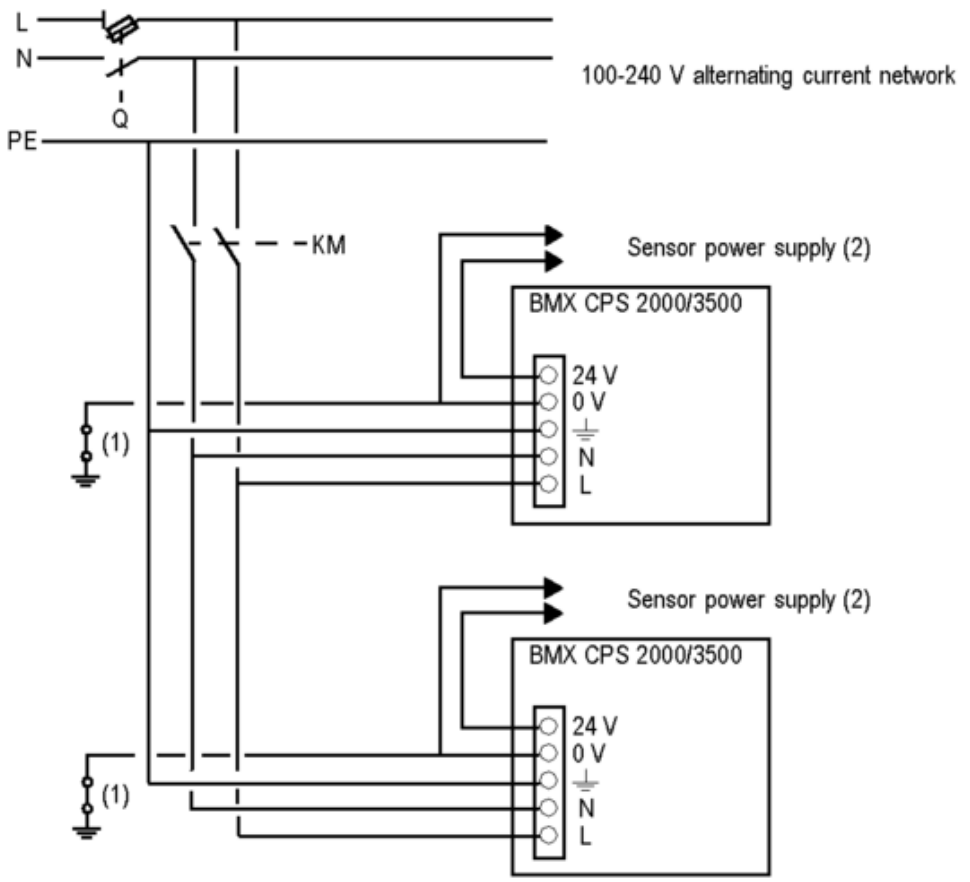


**Q** General isolator
**KM** Line contactor or circuit breaker
**(1)** Insulation connector bar for locating grounding errors
**(2)** Available current of 0.45 A for the BMXCPS2000 module or 0.9 A for the BMXCPS3500 module