# Product datasheet

Specifications

## standalone processor, Modicon M580, 64MB, 61 Ethernet devices, 31 remote IO racks of X80 and Quantum, conformal coating

BMEP586040C

## Main

| | |
|---|---|
| **Range Of Product** | Modicon M580 |
| **Product Or Component Type** | Processor module |
| **Impregnation Material** | Conformal coated |

## Complementary

| | |
|---|---|
| **Number Of Racks** | 8 |
| **Local I/O Processor Capacity (Discrete)** | 6144 I/O |
| **Local I/O Processor Capacity (Analog)** | 1536 I/O |
| **Number Of Application Specific Channel (Local Rack)** | 216 |
| **Application Specific I/O** | Serial link<br>HART<br>Motion control<br>Accurate time stamping<br>SSI encoder<br>Counter |
| **Checks** | Process control |
| **Control Channels** | Programmable loops |
| **Integrated Connection Type** | 1 Ethernet TCP/IP for service port<br>2 Ethernet TCP/IP for device network<br>USB type mini B |
| **Number Of Remote I/O Station** | 31 - 2 rack(s) per remote drop |
| **Number Of Distributed Equipment** | 64 |
| **Communication Module Processor Capacity** | 6 Ethernet communication module<br>24 AS-Interface module |
| **Communication Service** | RIO scanner<br>DIO scanner |
| **Memory Description** | Expandable flash, 4 GB for data storage<br>Integrated RAM, 10 kB for system memory<br>Integrated RAM, 64 MB for program and data |
| **Application Structure** | 2 auxiliary tasks<br>1 periodic fast task<br>128 event tasks<br>1 cyclic/periodic master task |
| **Number Of Instructions Per Ms** | 40 Kinst/ms 100 % Boolean<br>60 Kinst/ms 65 % Boolean + 35 % fixed arithmetic |
| **Current Consumption** | 300 mA at 24 V DC |
| **Mtbf Reliability** | 775000 H |
| **Marking** | CE |

Disclaimer: This documentation is not intended as a substitute for and is not to be used for determining suitability or reliability of these products for specific user applications

## Environment

| | |
|---|---|
| **Vibration Resistance** | 3 gn |
| **Shock Resistance** | 30 gn |
| **Ambient Air Temperature For Operation** | -25…60 °C |
| **Ambient Air Temperature For Storage** | -40…85 °C |
| **Operating Altitude** | 0...2000 m<br>2000...5000 m with derating factor |
| **Relative Humidity** | 5…95 % at 55 °C without condensation |
| **Ip Degree Of Protection** | IP20 |
| **Directives** | 2014/35/EU - low voltage directive<br>2014/30/EU - electromagnetic compatibility<br>2014/34/EU - ATEX directive |
| **Product Certifications** | CE<br>UL<br>CSA<br>RCM<br>EAC<br>Merchant Navy<br>ATEX zone 2/22<br>IECEx zone 2/22 |
| **Standards** | EN/IEC 61131-2<br>EN/IEC 61010-2-201<br>UL 61010-2-201<br>CSA C22.2 No 61010-2-201<br>IACS E10<br>EN/IEC 61000-6-5, interface type 1 and type 2<br>EN/IEC 61850-3, location G<br>EN/IEC 60079-0 |
| **Environmental Characteristic** | Gas resistant class Gx conforming to ISA S71.04<br>Gas resistant class 3C4 conforming to IEC 60721-3-3<br>Dust resistant class 3S4 conforming to IEC 60721-3-3<br>Sand resistant class 3S4 conforming to IEC 60721-3-3<br>Salt resistant level 2 conforming to IEC 68252<br>Mold growth resistant class 3B2 conforming to IEC 60721-3-3<br>Fungal spore resistant class 3B2 conforming to IEC 60721-3-3<br>Hazardous location class I division 2 |
| **Protective Treatment** | Conformal coating |
| **Supply** | Internal power supply via rack |
| **Status Led** | 1 LED (green) processor running (RUN)<br>1 LED (red) processor or system fault (ERR)<br>1 LED (red) I/O module fault (I/O)<br>1 LED (green) download in progress (DL)<br>1 LED (red) memory card or CPU flash fault (BACKUP)<br>1 LED (green/red) ETH MS (Ethernet port configuration status)<br>1 LED (green/red) Eth NS (Ethernet network status)<br>1 LED (green) I/O values overrided by user (FORCED IO) |
| **Net Weight** | 0.849 kg |

## Packing Units

| | |
|---|---|
| **Unit Type Of Package 1** | PCE |
| **Number Of Units In Package 1** | 1 |
| **Package 1 Height** | 9.000 cm |
| **Package 1 Width** | 17.900 cm |
| **Package 1 Length** | 25.200 cm |
| **Package 1 Weight** | 885.000 g |
| **Unit Type Of Package 2** | S03 |

| | |
|---|---|
| **Number Of Units In Package 2** | 6 |
| **Package 2 Height** | 30.000 cm |
| **Package 2 Width** | 30.000 cm |
| **Package 2 Length** | 40.000 cm |
| **Package 2 Weight** | 5.790 kg |

## Sustainability

**Green Premium™ label** is Schneider Electric's commitment to delivering products with best-in-class environmental performance. Green Premium promises compliance with the latest regulations, transparency on environmental impacts, as well as circular and low-$CO_2$ products.

**Guide to assessing product sustainability** is a white paper that clarifies global eco-label standards and how to interpret environmental declarations.

Learn more about Green Premium >

Guide to assess a product's sustainability >

Transparency RoHS/REACh

## Well-being performance

Mercury Free

| | |
|---|---|
| Rohs Exemption Information | Yes |

## Certifications & Standards

| | |
|---|---|
| **Reach Regulation** | REACh Declaration |
| **Eu Rohs Directive** | Pro-active compliance (Product out of EU RoHS legal scope) |
| **China Rohs Regulation** | China RoHS declaration |
| **Environmental Disclosure** | Product Environmental Profile |
| **Weee** | The product must be disposed on European Union markets following specific waste collection and never end up in rubbish bins |
| **Circularity Profile** | End of Life Information |

Dimensions Drawings

**CPU Module Only**

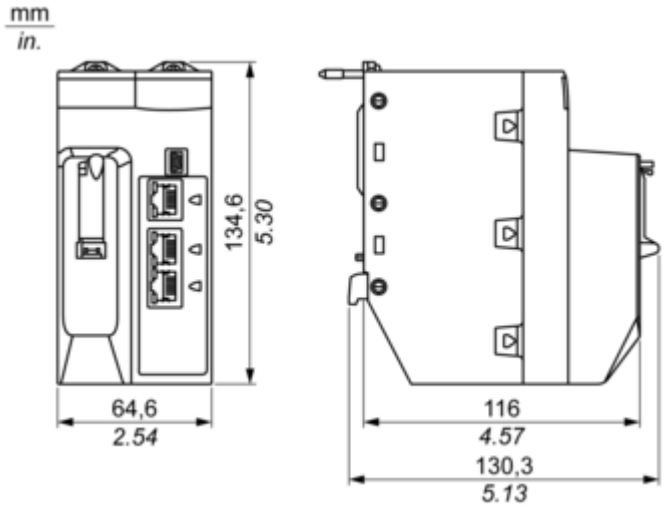

## Modules Mounted on Racks

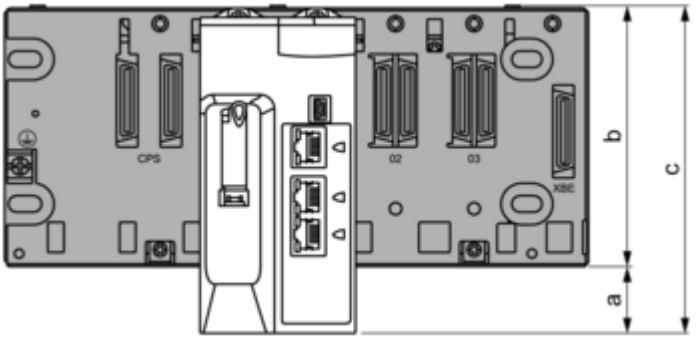


**a:** additional space below the rack to accommodate the height of the CPU. For an X Bus rack, the value is 30.9 mm (1.217 in.); for an Ethernet rack, the value is 29.49 mm (1.161 in.).
**b:** the height of the rack. For an X Bus rack, the height is 103.7 mm (4.083 in.); for an Ethernet rack, the height is 105.11 mm (4.138 in.).
**c:** the height of the main local rack, 134.6 mm (5.299 in.)

## Modules and Cables Mounted in an Enclosure

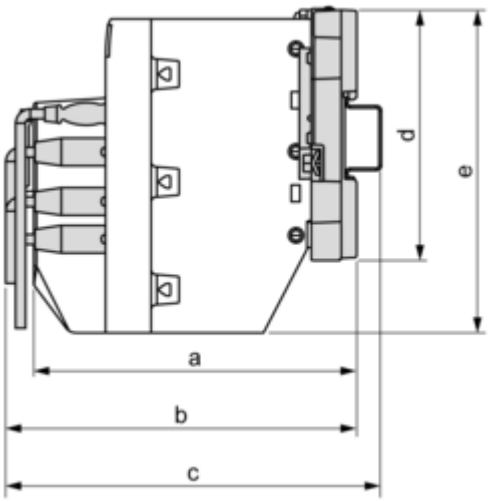


**a:** enclosure depth: 135 mm (5.315 in.)
**b:** wiring + module depth: > 146 mm (5.748 in.)
**c:** wiring + module + DIN rail depth: > 156 mm (6.142 in.)
**d:** rack height: for an X Bus rack 103.7 mm (4.083 in.); for an Ethernet rack, 105.11 mm (4.138 in.)
**e:** module height: 134.6 mm (5.299 in.)