# Product datasheet

Specifications

Green Premium™

## discrete I/O module Modicon Momentum - 16 I/O solid state

170ADM35015

Discontinued on: 1 Jan 2008

To be end-of-service on: 31 Dec 2027

Discontinued - Service only

## Main

| | |
|---|---|
| **Range Of Product** | Modicon Momentum automation platform |
| **Product Or Component Type** | Discrete solid state I/O base DC |
| **Group Of Channels** | 2 groups of 8 outputs<br>1 group of 16 inputs |
| **Discrete Input Number** | 16 conforming to IEC 1131-2 Type 1 |
| **Discrete Input Logic** | Negative |
| **Discrete Input Voltage** | 24 V DC |
| **Discrete Output Number** | 16 |
| **Discrete Output Type** | Solid state switch |
| **Discrete Output Voltage** | <= 30 V DC<br>24 V DC |
| **Discrete Output Logic** | Negative |
| **Protective Treatment** | TC |

## Complementary

| | |
|---|---|
| **[Us] Rated Supply Voltage** | 24 V DC |
| **Input Voltage Limits** | - 3...30 V |
| **Voltage State 0 Guaranteed** | 4...30 V |
| **Voltage State 1 Guaranteed** | -3...5 V |
| **Current State 0 Guaranteed** | <= 1.2 mA |
| **Current State 1 Guaranteed** | >= 2.5 mA |
| **Input Resistance** | 4 kOhm |
| **Discrete Output Current** | 4 A per group<br>8 A per module<br>0.5 A per point |
| **Maximum Leakage Current** | 1 mA at 24 V (output circuit) |
| **Peak Output Current** | 5 A |
| **Maximum Voltage Drop** | <0.5 V 0.5 A at state 1 output circuit |
| **Fault Type** | Overload on output |
| **Response Time** | < 0.1 ms from state 0 to state 1 on output<br>< 0.1 ms from state 1 to state 0 on output<br>2.2 ms from state 0 to state 1 on input<br>3.3 ms from state 1 to state 0 on input |

Disclaimer: This documentation is not intended as a substitute for and is not to be used for determining suitability or reliability of these products for specific user applications

| | |
|---|---|
| **Isolation Between Channels And Bus** | 500 V AC |
| **Power Dissipation** | 6 W<br><= 8 W |
| **Marking** | CE |
| **Terminals Description Plc N°1** | (10)IN_DIS#10<br>(11)IN_DIS#11<br>(1)IN_DIS#1<br>(M-)PW_NEG<br>(8)IN_DIS#8<br>(13)IN_DIS#13<br>(5)IN_DIS#5<br>(L+)PW_POS<br>(3)IN_DIS#3<br>(15)IN_DIS#15<br>(16)IN_DIS#16<br>(7)IN_DIS#7<br>(4)IN_DIS#4<br>(9)IN_DIS#9<br>(2)IN_DIS#2<br>(14)IN_DIS#14<br>(12)IN_DIS#12<br>TB<br>(6)IN_DIS#6 |
| **Terminals Description Plc N°2** | (4)OUT_DIS#4<br>(8)OUT_DIS#8<br>(6)OUT_DIS#6<br>(3)OUT_DIS#3<br>(2)OUT_DIS#2<br>(12)OUT_DIS#12<br>(9)OUT_DIS#9<br>(14)OUT_DIS#14<br>TB_1<br>(10)OUT_DIS#10<br>(1)OUT_DIS#1<br>(7)OUT_DIS#7<br>(1L+)PW_POS<br>(2L+)PW_POS<br>(11)OUT_DIS#11<br>(15)OUT_DIS#15<br>(13)OUT_DIS#13<br>(5)OUT_DIS#5<br>(16)OUT_DIS#16 |
| **Current Consumption** | 250 mA at 24 V DC |
| **Depth** | 47.5 mm |
| **Height** | 141.5 mm |
| **Width** | 125 mm |
| **Net Weight** | 0.2 kg |

# Environment

| | |
|---|---|
| **Product Certifications** | UL<br>CSA |
| **Resistance To Electrostatic Discharge** | 4 kV contact conforming to IEC 801-2<br>8 kV on air conforming to IEC 801-2 |
| **Resistance To Electromagnetic Fields** | 10 V/m 80...1000 MHz conforming to IEC 801-3 |
| **Ambient Air Temperature For Operation** | 0…60 °C |
| **Ambient Air Temperature For Storage** | -40…85 °C |
| **Relative Humidity** | 95 % without condensation |
| **Operating Altitude** | <= 5000 m |

# Packing Units

| | |
|---|---|
| **Unit Type Of Package 1** | PCE |
| **Number Of Units In Package 1** | 1 |
| **Package 1 Height** | 5.5 cm |
| **Package 1 Width** | 18 cm |
| **Package 1 Length** | 26 cm |
| **Package 1 Weight** | 370 g |
| **Unit Type Of Package 2** | S03 |
| **Number Of Units In Package 2** | 10 |
| **Package 2 Height** | 30.0 cm |
| **Package 2 Width** | 30.0 cm |
| **Package 2 Length** | 40.0 cm |
| **Package 2 Weight** | 3.7 kg |

## Contractual warranty

| | |
|---|---|
| **Warranty** | 18 months |

## Sustainability

**Green Premium™ label** is Schneider Electric's commitment to delivering products with best-in-class environmental performance. Green Premium promises compliance with the latest regulations, transparency on environmental impacts, as well as circular and low-$CO_2$ products.

**Guide to assessing product sustainability** is a white paper that clarifies global eco-label standards and how to interpret environmental declarations.

Learn more about Green Premium >

Guide to assess a product's sustainability >

Transparency RoHS/REACh

## Well-being performance

Mercury Free

| | |
|---|---|
| Rohs Exemption Information | Yes |

## Certifications & Standards

| | |
|---|---|
| **Eu Rohs Directive** | Pro-active compliance (Product out of EU RoHS legal scope)<br>EU RoHS Declaration |
| **China Rohs Regulation** | China RoHS declaration |
| **Environmental Disclosure** | Product Environmental Profile |
| **Weee** | The product must be disposed on European Union markets following specific waste collection and never end up in rubbish bins |
| **Circularity Profile** | End of Life Information |

Dimensions Drawings

## Standard Adapter on a Typical Base

### Dimensions

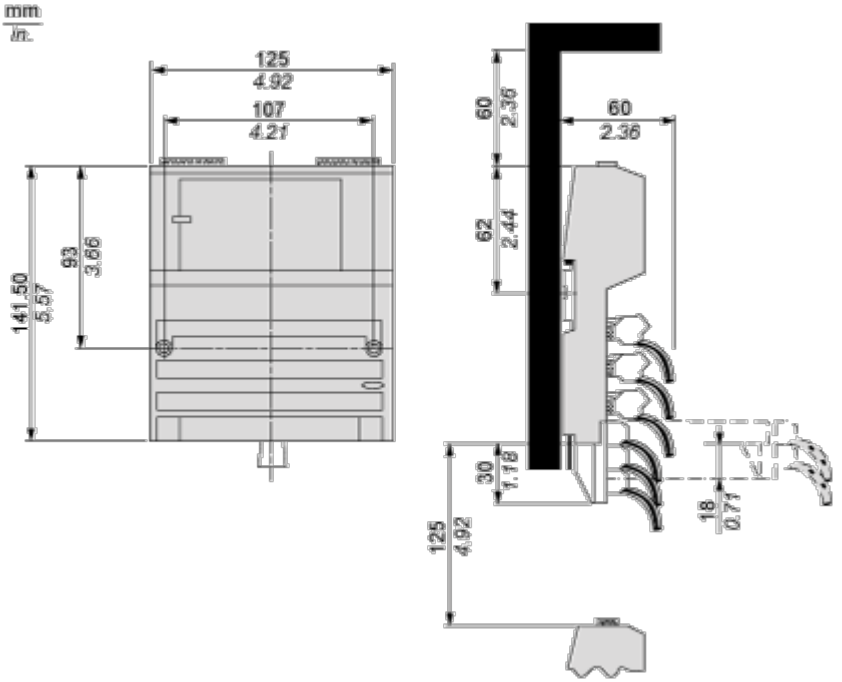

Mounting and Clearance

## Mounting on a Wall

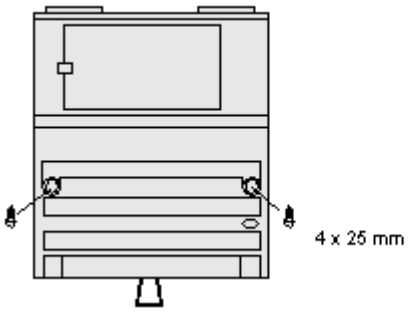

Connections and Schema

## External Wiring Diagrams

### 2-Wire Devices

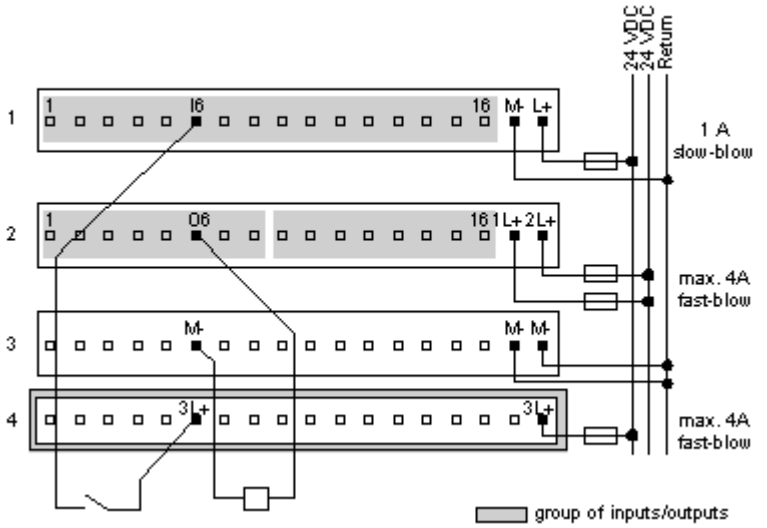


### Sensor Activated by Output

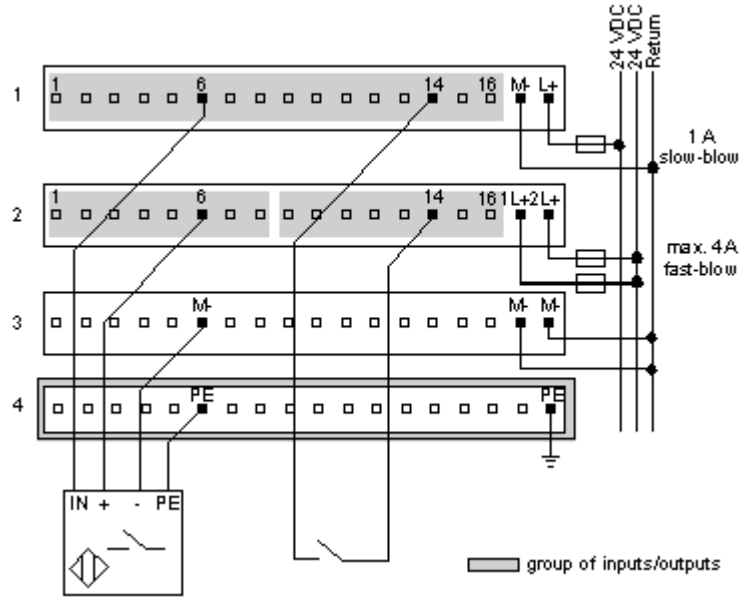


### Four-Wire Sensor with a Two-Wire Actuator

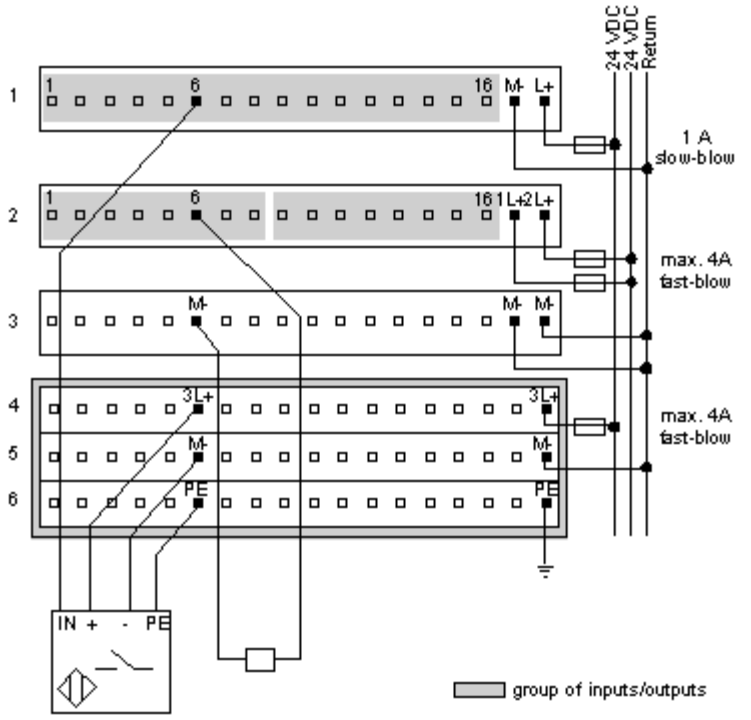


**Broken Wire Detection**

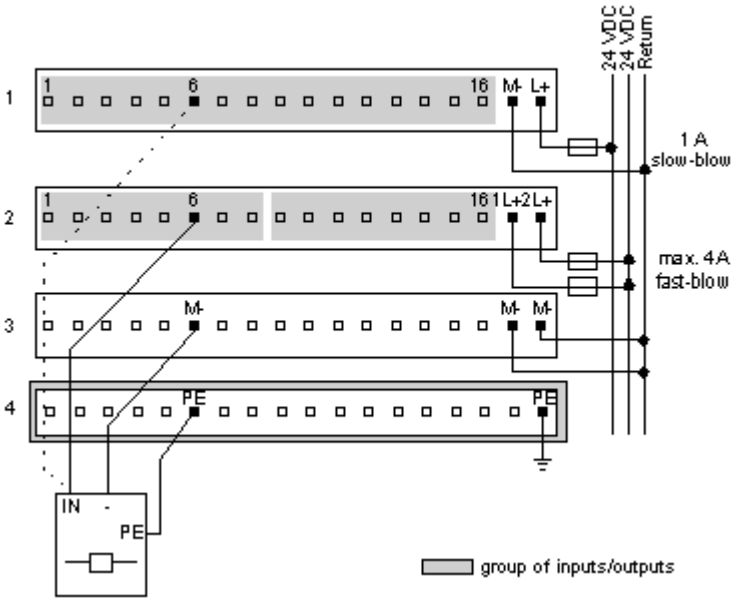

## Internal Pin Connections
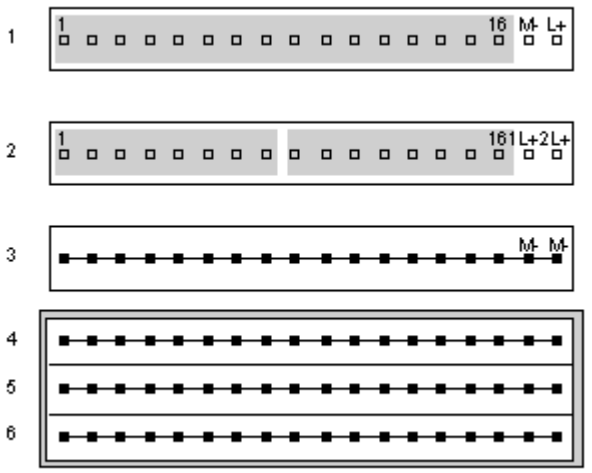
Rows 1 through 3 show the internal connections between terminals on the I/O base. Rows 4 through 6 show the internal connections on the optional busbar.