# Product datasheet

Specifications

Green Premium™

## discrete input module Modicon Quantum - 32 I - 24 V DC

140DDI35300C

To be discontinued on: 31 Dec 2029

To be end-of-service on: 31 Dec 2029

Discontinued - Service only

## Main

| | |
|---|---|
| **Range Of Product** | Modicon Quantum automation platform |
| **Product Or Component Type** | Low voltage dc discrete input modules |
| **Discrete Input Number** | 32 |

## Complementary

| | |
|---|---|
| **Group Of Channels** | 4 |
| **Logic Input** | Positive (sink) |
| **Discrete Input Voltage** | 24 V DC |
| **Input Voltage Limits** | 19.2...30 V |
| **Voltage State 1 Guaranteed** | 15...30 V DC |
| **Voltage State 0 Guaranteed** | -3...5 V DC |
| **Current State 1 Guaranteed** | >= 2 mA at Us = 5.5 V and Uin = 0 V |
| **Current State 0 Guaranteed** | <= 0.5 mA |
| **Addressing Requirement** | 2 input words |
| **Input Impedance** | 2500 Ohm |
| **Maximum Leakage Current** | 200 mA at Us = 5.5 V and Uin = 4 V |
| **Absolute Maximum Input** | 30 V continuous<br>56 V during 1.3 ms decaying pulse |
| **Response Time** | <= 1 ms from state 0 to state 1<br><= 1 ms from state 1 to state 0 |
| **Protection Type** | Input protection by resistor limited |
| **Power Dissipation** | 1.7 W + (0.36 x number of points on) |
| **Isolation Between Group And Bus** | 1780 Vrms for 1 minute |
| **Isolation Between Group** | 500 Vrms for 1 minute |
| **Local Signalling** | 1 LED (green) for bus communication is present (Active)<br>1 LED (red) for external fault detected (F)<br>32 LEDs (green) for input status |
| **Marking** | CE |
| **Bus Current Requirement** | 330 mA |
| **Module Format** | Standard |
| **Net Weight** | 0.3 kg |

Disclaimer: This documentation is not intended as a substitute for and is not to be used for determining suitability or reliability of these products for specific user applications

## Environment

| | |
|---|---|
| **Protective Treatment** | Conformal coating Humiseal 1A33 |
| **Standards** | CSA C22.2 No 142<br>UL 508 |
| **Product Certifications** | RMRS<br>ABS<br>GOST<br>BV<br>C-Tick<br>DNV<br>RINA |
| **Resistance To Electrostatic Discharge** | 4 kV contact conforming to IEC 801-2<br>8 kV on air conforming to IEC 801-2 |
| **Resistance To Electromagnetic Fields** | 10 V/m 80…2000 MHz conforming to IEC 801-3 |
| **Ambient Air Temperature For Operation** | 0…60 °C |
| **Ambient Air Temperature For Storage** | -40…85 °C |
| **Relative Humidity** | 95 % without condensation |
| **Operating Altitude** | <= 5000 m |

## Packing Units

| | |
|---|---|
| **Unit Type Of Package 1** | PCE |
| **Number Of Units In Package 1** | 1 |
| **Package 1 Height** | 16.3 cm |
| **Package 1 Width** | 4.5 cm |
| **Package 1 Length** | 31.2 cm |
| **Package 1 Weight** | 431.0 g |
| **Unit Type Of Package 2** | S02 |
| **Number Of Units In Package 2** | 2 |
| **Package 2 Height** | 15.0 cm |
| **Package 2 Width** | 30.0 cm |
| **Package 2 Length** | 40.0 cm |
| **Package 2 Weight** | 1.182 kg |

## Contractual warranty

| | |
|---|---|
| **Warranty** | 18 months |

## Sustainability

**Green Premium™ label** is Schneider Electric's commitment to delivering products with best-in-class environmental performance. Green Premium promises compliance with the latest regulations, transparency on environmental impacts, as well as circular and low-$CO_2$ products.

**Guide to assessing product sustainability** is a white paper that clarifies global eco-label standards and how to interpret environmental declarations.

Learn more about Green Premium >

Guide to assess a product's sustainability >

RoHS/REACh

## Well-being performance

| | |
|---|---|
| Reach Free Of Svhc | |
| Mercury Free | |
| Rohs Exemption Information | Yes |

## Certifications & Standards

| | |
|---|---|
| **Eu Rohs Directive** | Pro-active compliance (Product out of EU RoHS legal scope)<br>EU RoHS Declaration |
| **China Rohs Regulation** | China RoHS declaration |
| **Weee** | The product must be disposed on European Union markets following specific waste collection and never end up in rubbish bins |
| **Circularity Profile** | End of Life Information |

## Dimensions Drawings

### Racks for Modules Mounting

#### Dimensions of Modules and Racks

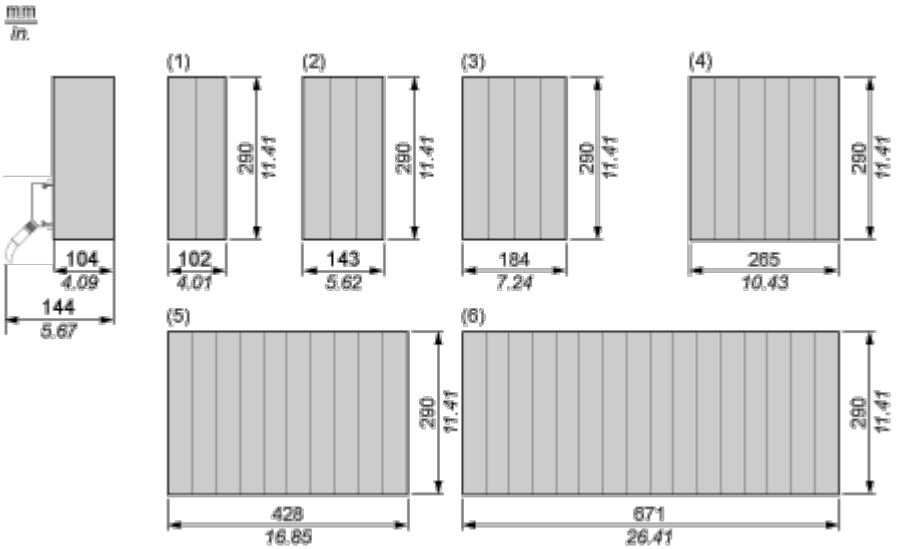


(1) 2 slots

(2) 3 slots

(3) 4 slots

(4) 6 slots

(5) 10 slots

(6) 16 slots

Connections and Schema

## 24 Vdc Discrete Input Sink Module

### Wiring Diagram

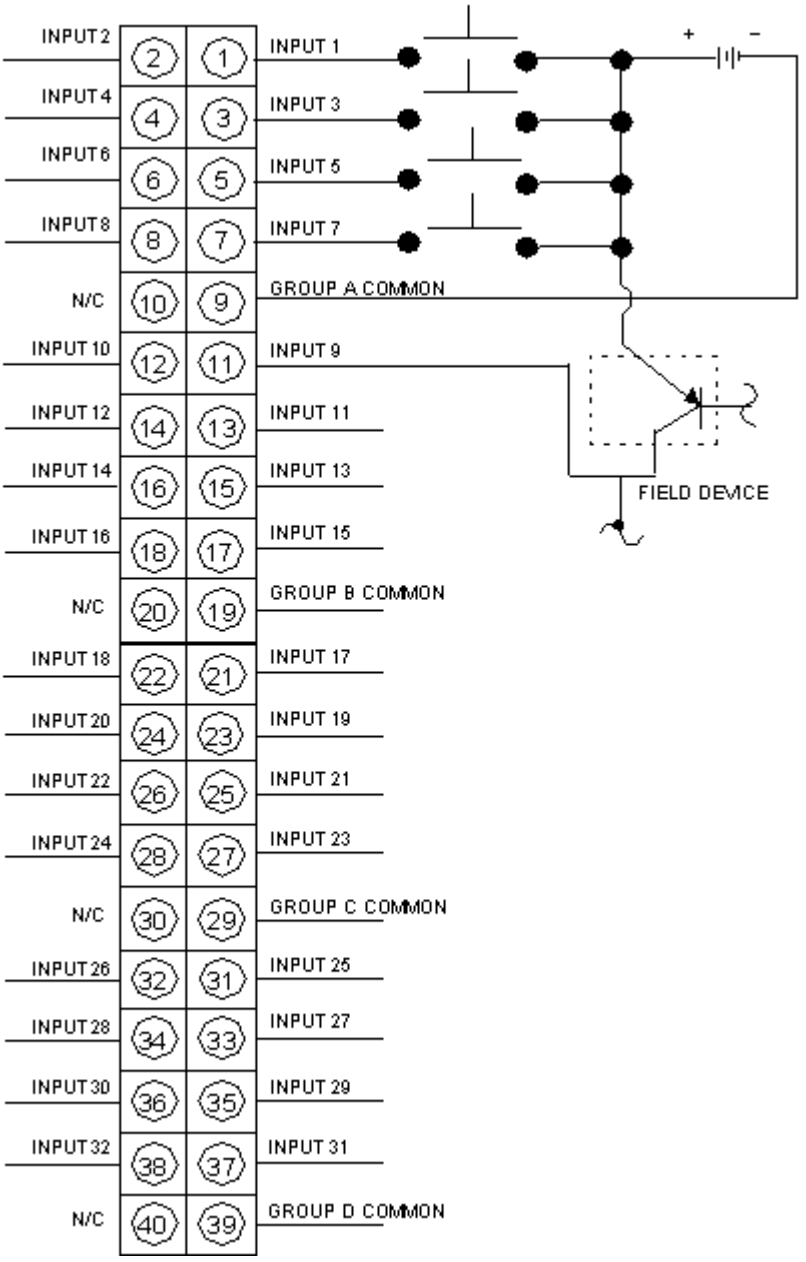


N/C Not Connected