Product datasheet

Specifications

Green Premium™

discrete input module Modicon Quantum - 32 I 24 V DC

140DDI35300

Discontinued on: 31 Dec 2022

To be end-of-service on: 31 Dec 2030

Discontinued - Service only

Main

Range Of Product	Modicon Quantum automation platform
Product Or Component Type	Low voltage dc discrete input modules
Discrete Input Number	32

Complementary

Group Of Channels	4
Logic Input	Positive (sink)
Discrete Input Voltage	24 V DC
Input Voltage Limits	19.2...30 V
Voltage State 1 Guaranteed	15...30 V DC
Voltage State 0 Guaranteed	-3...5 V DC
Current State 1 Guaranteed	>= 2 mA at Us = 5.5 V and Uin = 0 V
Current State 0 Guaranteed	<= 0.5 mA
Addressing Requirement	2 input words
Input Impedance	2500 Ohm
Maximum Leakage Current	200 mA at Us = 5.5 V and Uin = 4 V
Absolute Maximum Input	30 V continuous 56 V during 1.3 ms decaying pulse
Response Time	<= 1 ms from state 0 to state 1 <= 1 ms from state 1 to state 0
Protection Type	Input protection by resistor limited
Power Dissipation	1.7 W + (0.36 x number of points on)
Isolation Between Group And Bus	1780 Vrms for 1 minute
Isolation Between Group	500 Vrms for 1 minute
Local Signalling	1 LED (green) for bus communication is present (Active) 1 LED (red) for external fault detected (F) 32 LEDs (green) for input status
Marking	CE
Bus Current Requirement	330 mA
Module Format	Standard
Net Weight	0.3 kg

Disclaimer: This documentation is not intended as a substitute for and is not to be used for determining suitability or reliability of these products for specific user applications

Environment

Standards	CSA C22.2 No 142 UL 508
Product Certifications	C-Tick DNV RINA RMRS BV GOST ABS
Resistance To Electrostatic Discharge	4 kV contact conforming to IEC 801-2 8 kV on air conforming to IEC 801-2
Resistance To Electromagnetic Fields	10 V/m 80…2000 MHz conforming to IEC 801-3
Ambient Air Temperature For Operation	0…60 °C
Ambient Air Temperature For Storage	-40…85 °C
Relative Humidity	95 % without condensation
Operating Altitude	<= 5000 m

Packing Units

Unit Type Of Package 1	PCE
Number Of Units In Package 1	1
Package 1 Height	4.65 cm
Package 1 Width	16.45 cm
Package 1 Length	30.97 cm
Package 1 Weight	409.2 g
Unit Type Of Package 2	S03
Number Of Units In Package 2	7
Package 2 Height	30 cm
Package 2 Width	30 cm
Package 2 Length	40 cm
Package 2 Weight	3494 g
Unit Type Of Package 3	P12
Number Of Units In Package 3	168
Package 3 Height	95 cm
Package 3 Width	80 cm
Package 3 Length	120 cm
Package 3 Weight	92856 g

Contractual warranty

Warranty	18 months

Sustainability

Green Premium™ label is Schneider Electric's commitment to delivering products with best-in-class environmental performance. Green Premium promises compliance with the latest regulations, transparency on environmental impacts, as well as circular and low-CO_2 products.

Guide to assessing product sustainability is a white paper that clarifies global eco-label standards and how to interpret environmental declarations.

Learn more about Green Premium >

Guide to assess a product's sustainability >

RoHS/REACh

Well-being performance

Reach Free Of Svhc	
Mercury Free	
Rohs Exemption Information	Yes

Certifications & Standards

Eu Rohs Directive	Pro-active compliance (Product out of EU RoHS legal scope) EU RoHS Declaration
China Rohs Regulation	China RoHS declaration
Weee	The product must be disposed on European Union markets following specific waste collection and never end up in rubbish bins
Circularity Profile	End of Life Information

Dimensions Drawings

Racks for Modules Mounting

Dimensions of Modules and Racks

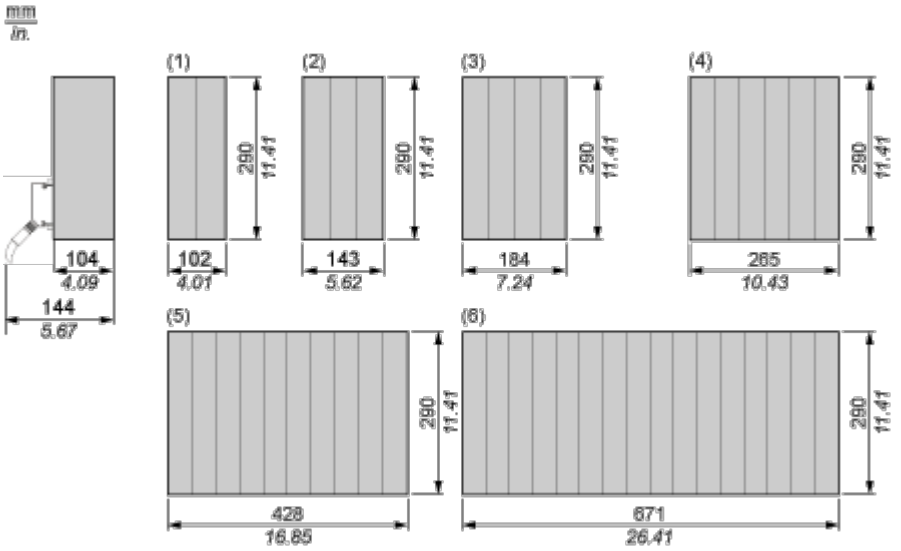

(1) 2 slots

(2) 3 slots

(3) 4 slots

(4) 6 slots

(5) 10 slots

(6) 16 slots

Connections and Schema

24 Vdc Discrete Input Sink Module

Wiring Diagram

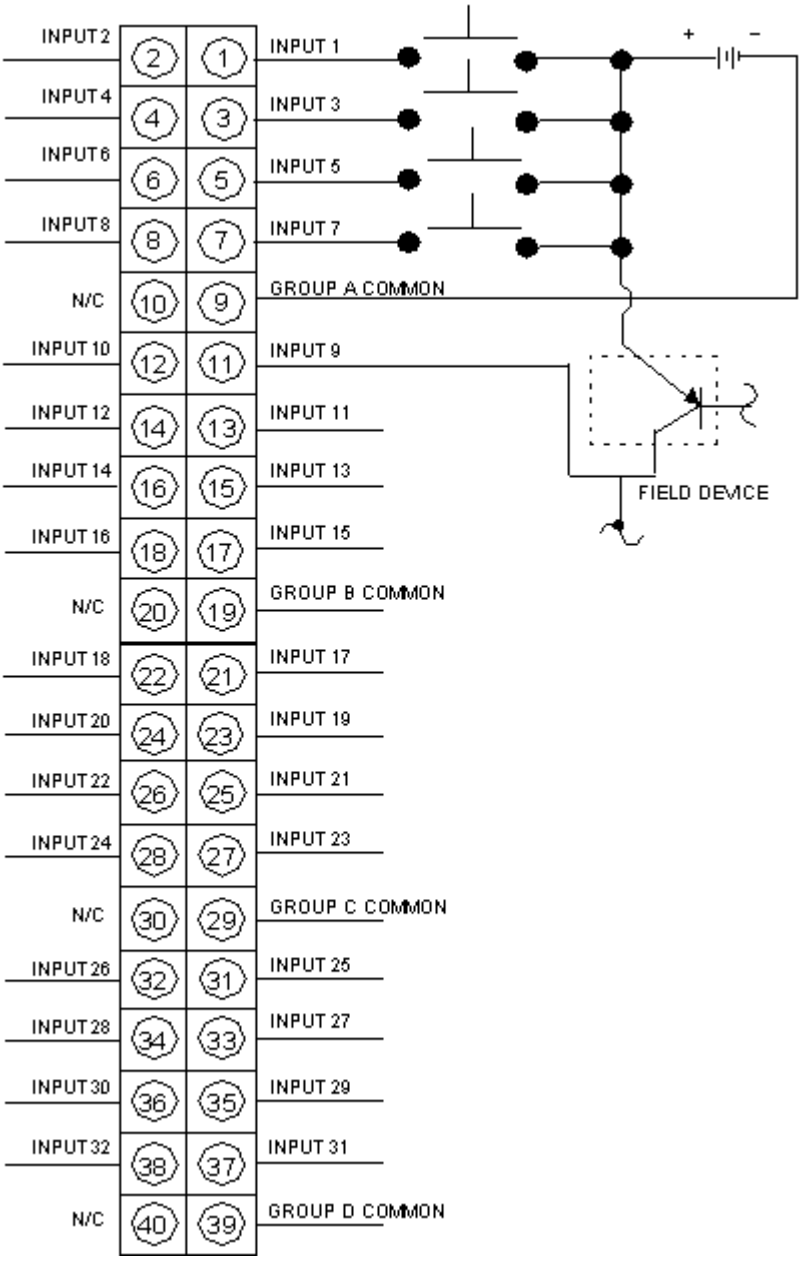

N/C Not Connected