Product datasheet

Specifications

Green Premium™

discrete output module Modicon Quantum - 32 O - 20..253 V AC

140DAO85300

Discontinued on: 31 Dec 2022

To be end-of-service on: 31 Dec 2030

Discontinued - Service only

Main

Range Of Product	Modicon Quantum automation platform
Product Or Component Type	AC discrete output modules
Discrete Output Number	32

Complementary

Group Of Channels	4 groups of 8 channels
Supply Frequency	47...63 Hz
Maximum Voltage Drop	1.5 V
Discrete Output Voltage	20...253 V AC
Addressing Requirement	2 output words
Absolute Maximum Output	300 Vrms for 10 s AC 400 Vrms 1 cycle AC
Maximum Load Current	16 A rms per module 4 A rms per group 0.88 mA 230 V off state leakage per output 1 A rms 20...253 V per output
Surge Current	2.5 A during 1 ms
Dv/Dt	400 V/ms
Response Time	<= 0.5 ms at state 0 to state 1 <= 0.5 ms at state 1 to state 0
Protection Type	Internal output protection by 4 A fuse Internal by RC filter
Power Dissipation	1.60 + (1.0 V x total module load current)
Marking	CE
Local Signalling	1 LED (green) for bus communication is present (Active) 1 LED (red) for external fault detected (F) 32 LEDs (green) for input status
Bus Current Requirement	320 mA
Module Format	Standard
Net Weight	0.45 kg

Environment

Product Certifications	cUL FM Class 1 Division 2

Disclaimer: This documentation is not intended as a substitute for and is not to be used for determining suitability or reliability of these products for specific user applications

Standards	CSA C22.2 No 142 UL 508
Electromagnetic Compatibility	Electrostatic discharge immunity test - test level: 4 kV (contact discharge) conforming to IEC 801-2 Electrostatic discharge immunity test - test level: 8 kV (air discharge) conforming to IEC 801-2 Susceptibility to electromagnetic fields - test level: 10 V/m (80...1000 MHz) conforming to IEC 801-3
Ambient Air Temperature For Operation	0…60 °C
Ambient Air Temperature For Storage	-40…85 °C
Relative Humidity	95 % without condensation
Operating Altitude	<= 5000 m

Packing Units

Unit Type Of Package 1	PCE
Number Of Units In Package 1	1
Package 1 Height	4.700 cm
Package 1 Width	16.400 cm
Package 1 Length	31.500 cm
Package 1 Weight	492.000 g
Unit Type Of Package 2	S03
Number Of Units In Package 2	7
Package 2 Height	30.000 cm
Package 2 Width	30.000 cm
Package 2 Length	40.000 cm
Package 2 Weight	3.937 kg

Contractual warranty

Warranty	18 months

Sustainability

Green Premium™ label is Schneider Electric's commitment to delivering products with best-in-class environmental performance. Green Premium promises compliance with the latest regulations, transparency on environmental impacts, as well as circular and low-CO_2 products.

Guide to assessing product sustainability is a white paper that clarifies global eco-label standards and how to interpret environmental declarations.

Learn more about Green Premium >

Guide to assess a product's sustainability >

RoHS/REACh

Well-being performance

Reach Free Of Svhc	
Mercury Free	
Rohs Exemption Information	Yes

Certifications & Standards

Eu Rohs Directive	Pro-active compliance (Product out of EU RoHS legal scope) EU RoHS Declaration
China Rohs Regulation	China RoHS declaration
Weee	The product must be disposed on European Union markets following specific waste collection and never end up in rubbish bins
Circularity Profile	End of Life Information

Dimensions Drawings

Racks for Modules Mounting

Dimensions of Modules and Racks

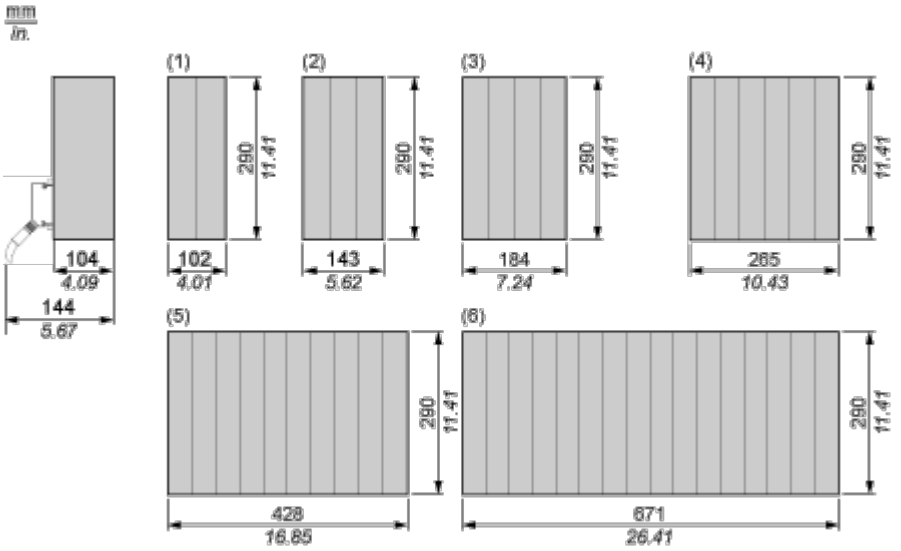

(1) 2 slots

(2) 3 slots

(3) 4 slots

(4) 6 slots

(5) 10 slots

(6) 16 slots

Connections and Schema

24...230 Vac Discrete Output Module

Wiring Diagram

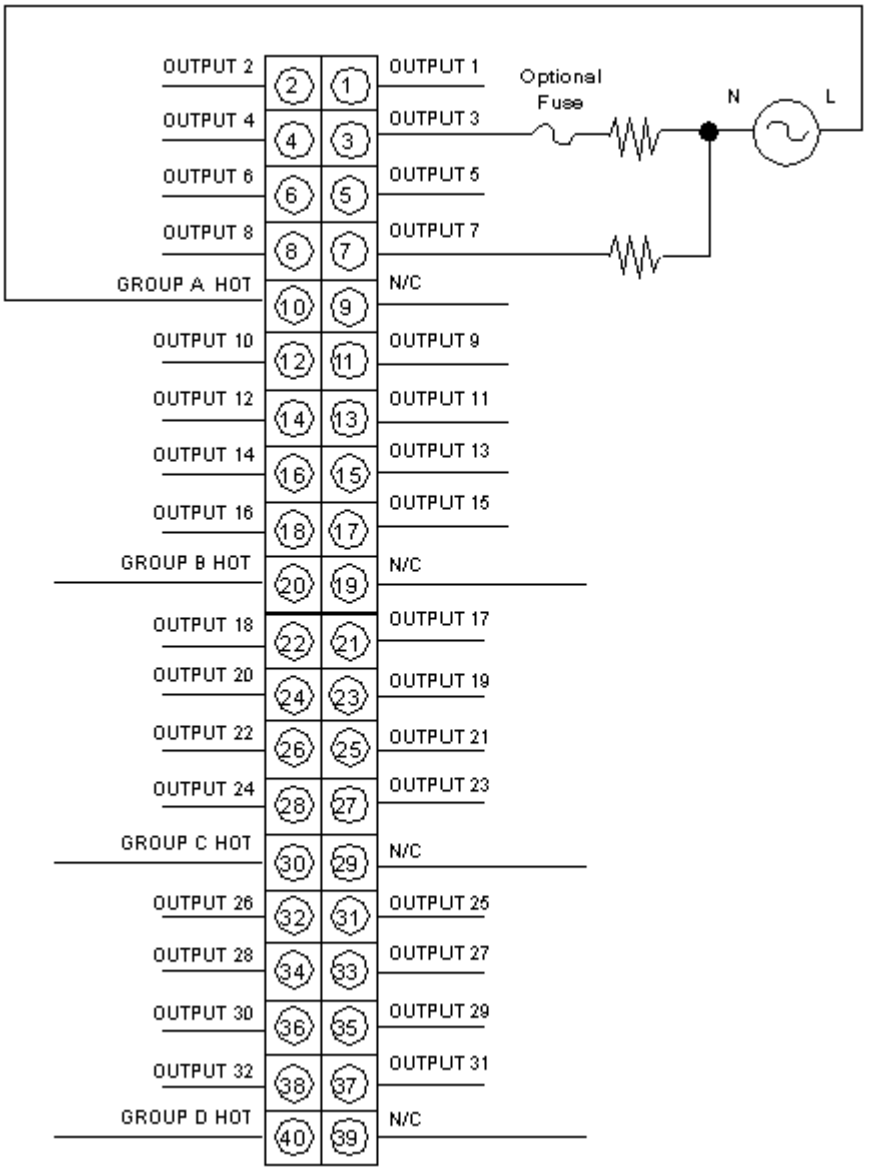

N/C Not Connected